Ultra Whisper 400-600

Owner's Manual

Release Date: January, 2017

SYSTEM MODELS

Ultra Whisper 400
Ultra Whisper 600

Manual PN B651380001D | Revision: 01/01/17

Ultra Whisper 400-600

Owner's Manual

Manual PN B651380001D

Contents

Chapter 1: About this Manual 7
About Sea Recovery 7
Purpose 7
References 7
Graphics 7
Notice of Liability 8
Trademarks 8
Terms and Conditions 8
Copyright 8
Revision History 8

Chapter 2: Introduction 9
Welcome 9
Models 10
Parts Warning 10
Warranty and Registration 10
Limited Warranty 10
Cleaning 11
Product Changes 11
Obtaining Warranty Service 11
Registration 11
Safety 11
Disposal 11
Compliance 12
Patent Information 12

Chapter 3: System Specifications 13
Feed Water and Recovery 13
System Pressure 13
Performance 14
External Installation Water Connections 14
Feed Water Pump Motor Electrical Specifications 14
Operating Amperage 15
Weight 15

Chapter 4: System and Components Description 17
Component Functions and Descriptions 17
Pre-filtration Components 17
Pressurization Components 18
Brine Discharge Components 18
Product Water and Post-Filtration Components 19
Fresh Water Flush and RO Membrane Element Cleaning..... 19
Electronic Components 20
Plumbing Connections 20

Chapter 5: Pre-Installation Safety 23
Storage Prior to Uncrating 23
Uncrating 23
Tools required for Installation 23
Chemical Precautions..... 23
System Safety Check 24
Installer Minimum Qualifications 24
Warnings 24
Special Considerations 25
Components Supplied by the Installer or Owner 25

Chapter 6: Installation 27
System and Component Mounting 27
Electrical Connections 28
Hose Lines 29
Required Hose and Tube Connections 29
Ultraviolet (UV) Light Installation 31
Plumbing Requirements 31
Install Fittings 31
Install Quartz Sleeve 31
Connect Plumbing 32
Install Lamp 32
Mounting the Unit 32
Operational Notes 32
Single Membrane Installation Drawing 34
Dual Membrane Installation Drawing 35
Modular Installation Drawing 36

Chapter 7: Commissioning a New System 37
New System Start-up Procedures 37
Pressure Changes 39
Sea Recovery Ultra Whisper NEW SYSTEM INITIAL READINGS 40

Chapter 8: System Daily Operation 41
Day-to-Day Start-up Procedures for the Ultra Whisper System 41
Controller Operations 42
Display Menu 42
Configuration (Change) Menu 43
Configuration (Read) Menu 43
Fresh Water Flush button 44
Shutting Down the Ultra Whisper System 44
Maintenance Schedule 45

Chapter 9: System Storage and Cleaning 47
Membrane Element Handling and System Storage Warnings 47
Fresh Water Flush 47
Automated Fresh Water Flush 48
Manual Fresh Water Flush 48
Once-Through Depressurized Rinse 48
RO Membrane Element Cleaning Closed Loop 49
Short-Term Shutdown 49
Long-Term Shutdown 51
RO Membrane Element Cleaning 52
Closed Loop Configuration 55

Chapter 10: Troubleshooting 59
Error ID 1: High Pressure Fault 59
Error ID 2: High Pressure Fault 59
Error ID 3: Low Pressure Fault 59
Error ID 4: Low Voltage Fault 60
Loud or Whining Pump 60
Remaining Pressure in the System After Shut Down 60
Stuck or Blocked R.O.Boost 60
3-Way Product Water Diversion Valve Abnormalities 61
High-Pressure or Low-Pressure Abnormalities Due to Mismatch of Components 61
Product Water Abnormalities. 62
Lower-Than-Normal Product Water Flow 62
Higher-Than-Normal Product Water Flow 62
Low Product Water Quality (increase of salt content in the product water) 63
Product Water Tank has Foul Smell 63

Chapter 11: Electrical Information 65
ELECTRICAL REQUIREMENTS 65

Chapter 12: Exploded Parts View 69
B001380001 INSTALLATION KIT 70
B006380002 SEA STRAINER UWDX 5IN 71
B007300022 FEED PUMP ASSY UW 400-12V 72
B007300025FEED PUMP ASSY UW 600-12V 73
B007300023 FEED PUMP ASSY UW 400-24V 74
B007300026FEED PUMP ASSY UW 600-24V 75
B007300024FEED PUMP ASSY UW 400-115-230VAC 76
B007300027 FEED PUMP ASSY UW 600-115-230VAC 77
B008220001 PLANKTON FILTER ASSY UW-SE 78
0821003 PROD-BRINE, MANIF ASSY, UWIII 80
0561009 PUMP, R.O. BOOST, ASSY, UWIII 82
0561015 PUMP, R.O. BOOST, MOD, ASSY, UWIII 83
MEMBRANE VESSEL 400-600 GPD COMPACT 84
B196120015 MEMBRANE VESSEL ASSY 600-2 86
MEMBRANE VESSEL 400-600 GPD MODULAR 88
HP HOSE ASSEMBLY 90
0821003 PROD-BRINE, MANIF ASSY, UWIII 91
1401096100 3-WAY PRODUCT WATER DIVERSION SOLENOID VALVE 92
B521220002 CHARCOAL FILTER ASSY 170-350-UW 93
B561080001 PH NEUTRALIZER ASSY 0.5-1.5 GPM 94
B5262000CV UV STERILIZER 96
B611220003 REMOTE AW170 UW AWII 98
AVAILABLE TUBE AND FITTINGS 99
TUBE COMPRESSION FITTINGS REPLACEMENT PARTS 102

Chapter 13: Appendix 103

Chapter 1

About this Manual

About Sea Recovery

Since 1981, Sea Recovery Corporation has produced water desalination systems, used in various applications, for customers around the world. Currently, Sea Recovery Corporation stands apart as a leader in advanced water desalination systems for leisure marine applications.

Sea Recovery Corp.
P.O. Box 5288
Carson, CA 90745-5288
sales@searecovery.com
www.searecovery.com

Purpose

This manual is intended for Sea Recovery's system technicians, technical support and training personnel. It contains technical information and instructions for the installation, operation, maintenance and troubleshooting of the Ultra Whisper RO Desalination System. Sea Recovery's RO desalination systems are designed and engineered to function as complete working units. If installation, operation and maintenance instructions are not followed correctly, the system might cascade in failure. Thus, the intent of this manual is to familiarize you, or other installer(s) and/or operator(s) with each system component. With a core understanding of the function, importance and normal operation of each subsystem component, you will be equipped to diagnose minor problems, which, if detected early on, are typically correctable. Note that if a minor component problem is left uncorrected, it can affect the rest of the system and lead to more extensive issues and/or damage.

Important: Sea Recovery encourages you to read the Ultra Whisper RO Desalination System manual thoroughly before attempting installation or operation, as well as to keep the manual for future reference. By gaining a better understanding of your system, you will be equipped with the knowledge to achieve optimum performance and a longer service life.

References

All references in this manual refer to chapters within this manual, unless otherwise specified.

Graphics

Graphics used in this manual are for reference and illustration purposes only, and may not represent the actual part or arrangement of parts in a customized system.

Notice of Liability

The information contained in the manual is distributed on an “as is” basis, without warranty. While every effort has been taken in the preparation of this manual, Sea Recovery Corporation shall not be held liable with respect to any liability, loss or damage caused by the instructions contained in this manual. The information contained in this manual is subject to change without notice.

Trademarks

The Sea Recovery® logo mark is a U.S. Registered Trademark and belongs to Sea Recovery Corporation with all rights reserved. Sea Recovery® is a U.S. Registered trademark of Sea Recovery Corporation. Ultra Whisper is a trademark of Sea Recovery Corporation.

Terms and Conditions

The use of this manual acknowledges acceptance of the terms and conditions provided herewith and the agreement to comply with all applicable laws and regulations pertaining to the use of this manual. In addition, the use of this manual forms an agreement that Sea Recovery’s trademarked name or Sea Recovery’s trademarked logo mark are not to be used in any form or manner except with Sea Recovery Corporation’s written permission. Sea Recovery Corporation holds all rights to its copyrights and trademarks, and to the material contained in this manual. Any use of such requires the written permission from Sea Recovery Corporation.

Copyright

All content included within this manual, including text, graphics, logos and images, is the property of and protected by U.S. and international copyright laws. The compilation (i.e., the preparation, collection, arrangement and assembly) of all content within this manual is the exclusive property of and protected by U.S. and international copyright laws. All software used in the design and manufacture of the Ultra Whisper RO Desalination System is the property of Sea Recovery Corporation and protected by U.S. and international copyright laws. All computer and logic programming used in the design and manufacture of the Ultra Whisper RO Desalination System is the property of and protected by U.S. and international copyright laws. The content of this manual and the software, programming, and graphics used in the design and manufacture of the Ultra Whisper RO Desalination System is for the purpose of operation, maintaining and repair of the Ultra Whisper RO Desalination System. Any other use, including the reproduction, modification, distribution, transmission, republication, display or performance, of the content within this manual is strictly prohibited. © Copyright 2017

Revision History

Rev #	Date	Affected Pages	Description
9	2017-February	Entire Book	Added new parts views, assembly diagrams, pictures, and written content.
8	2014-August	Entire Book	Added new parts views, assembly diagrams, pictures, and written content.
7	2013-January	Entire Book	Added new parts view section, and correction with the new R.O. BOOST
6	2012	All	Full revision of manual layout and content
5	March 30 2010	10-1 through 10-47	Updated drawings for exploded parts view
4	23 November 2009	5-2	Multimedia filter installation revision
3	22 September 2009	-	General layout and typesetting changes
2	4 September 2009	4-11 through 4-15, and fold-outs	Replaced wiring diagrams
1	3 August 2009	3-6 through 3-10	Additional installation option diagrams
0	1 December 2008	-	Initial release of 2008 models

Chapter 2

Introduction

Welcome

Congratulations on your purchase of a new Sea Recovery Ultra Whisper Reverse Osmosis (RO) Desalination System! The Ultra Whisper RO Desalination System is a low power water maker, engineered for boaters with limited electrical options. The Ultra Whisper features automatic operation and is easy to use with its simple Start and Stop controls. It serves as an efficient water supply, ideal for small power boats and sail boats.

Inside this manual, you will find detailed technical information and instructions for the installation, operation, maintenance and troubleshooting of your Ultra Whisper RO Desalination System.

Note: The term "System" refers to the Ultra Whisper RO Desalination System and will be used throughout this manual.

Models

The System series is available in the following compact and modular models:

- Ultra Whisper Compact 400
- Ultra Whisper Compact 600
- Ultra Whisper Modular 400
- Ultra Whisper Modular 600

Please note that your System also includes a system tag that lists the product name, model number and serial number.

Parts Warning

The major documented cause of failures and problems are from the use of third-party, non-Sea Recovery parts; improper installation; and improper operation. Do not use parts, components from any source other than Sea Recovery! The use of third party, non-Sea Recovery parts is strongly discouraged and will result in the following consequences:

- The use of third-party, non-Sea Recovery components, spares and assemblies will damage the Sea Recovery System and/or specific components within the System.
- The use of third-party, non-Sea Recovery components, spares and assemblies voids any and all warranty of the System and/or voids the affected component within the System.

Sea Recovery Corporation maintains inventory for immediate shipment and our Service Dealers throughout the world maintain stock of Sea Recovery parts. Always insist on Sea Recovery supplied parts in order to avoid failures, eliminate problems, and maintain your warranty.

Warranty and Registration

Sea Recovery Corporation guarantees its product, components and replacement parts, and strongly advises that customers use only Sea Recovery parts. The majority of Ultra Whisper RO Desalination System problems derive from premature failure of unauthorized third party replacement parts.

Using unauthorized parts will void the Sea Recovery Corporation warranty! Use of non-Sea Recovery Corporation supplied parts and accessories, including but not limited to, maintenance parts, pre-filter elements, cleaning and storage chemical, spare parts, replacement parts, system components, installation components and/or system accessories, shall void all warranty expressed or implied.

Limited Warranty

Sea Recovery warrants that the Ultra Whisper RO Desalination System performs according to specifications for a period of 12 months from the date of shipment. Sea Recovery's liability under this warranty is limited to repair or replacement of the Ultra Whisper RO Desalination System at Sea Recovery Corporation's discretion.

Under no circumstances is Sea Recovery Corporation liable for consequential damages arising out of or in any way connected with the failure of the System to perform as set forth herein. This limited warranty is in lieu of all

other expressed or implied warranties, including those of merchantability and fitness for a particular purpose. The warranty period starts from the date of original shipment by Sea Recovery Corporation, or with proof of purchase from the date of sale to the original retail purchaser. The following warranty periods apply:

- System and accessories: One (1) year
- Repairs made by Sea Recovery Corporation after the original warranty period has expired: Three (3) months
- Normal, reoccurring user maintenance on the following is not covered by this or any Sea Recovery Corporation limited warranty: Sea Strainer Element, fuses, instrument calibration, cartridge filter elements and/or the centrifugal pump seal assemblies

The implied warranties, which the law imposes on the sale of this product, are expressly LIMITED in duration to the time period above. Sea Recovery Corporation shall not be liable for damages, consequential or otherwise, resulting from the installation, use, and/or operation of this product or from the breach of this LIMITED WARRANTY.

Attention: The Sea Recovery Corporation limited warranty does not cover third-party installation components. Improper installation resulting in System or component failure/performance decline is not covered by this or any Sea Recovery Corporation limited warranty. The limited warranty does not extend to any system or system component which has been subjected to alteration, misuse, neglect, accident, improper installation, inadequate or improper repair or maintenance or subject to use in violation of instructions furnished by Sea Recovery Corporation, nor does the warranty extend to components on which the serial number has been removed, defaced, or changed.

Cleaning

The Ultra Whisper RO membrane is guaranteed to be cleanable for a minimum of one (1) year from date of shipment, providing cleaning periods are adhered to, and fouling is acid soluble metal hydroxides and calcium carbonates or alkaline soluble organic, inorganic substances and microbiological slimes. The Sea Recovery RO Membrane Element is not guaranteed against iron fouling (rust), chemical or petroleum products attack, extreme temperatures, drying out, or extreme pressures. In the event of a defect, a malfunction, or failure specifically covered by this warranty and during the warranty period, Sea Recovery Corporation will repair or replace, at its option, the product or component therein which upon examination by Sea Recovery Corporation appears to be defective.

Product Changes

Sea Recovery Corporation reserves the right to make changes or improvements in its product, during subsequent production, without incurring the obligation to incorporate such changes or improvements on previously manufactured equipment.

Obtaining Warranty Service

To obtain warranty service, the defective product or part must be returned to an authorized Sea Recovery Corporation Service Center or direct to Sea Recovery Corporation. An updated listing of Sea Recovery Corporation Factory Service Centers can be found on the Sea Recovery Corporation web site at http://www.searecovery.com. The purchaser must pay any transportation or labor expenses incurred in removing and returning the product to the service center or to Sea Recovery Corporation.

Registration

Sea Recovery Corporation recommends that all customers register their System immediately after delivery to ensure and guarantee product technical support and warranty.

Safety

Parties responsible for the installation, operation, and maintenance of the Ultra Whisper RO Desalination System must read this manual thoroughly and comply with the instructions and safety requirements at all times.

Disposal

If System disposal is necessary, you must comply with all federal and state environmental regulations.

Compliance

- Sea Recovery's Reverse Osmosis Desalination Systems Are Type Accepted by the American Bureau of Shipping, ABS.
- Sea Recovery's Reverse Osmosis Desalination Systems comply with FCC § 15.105
- Sea Recovery's Reverse Osmosis Desalination Systems have been independently tested and determined to be in compliance with European CE (Conformité Européne).

Please refer to the Appendix for copies of compliance certificates.

Patent Information

Certain aspects of the Ultra Whisper RO Desalination System are protected by U.S. and International Patent Laws.

Chapter 3

System Specifications

Feed Water and Recovery

Important: If any of the following components are mismatched, the System will not function properly. The operating pressure and/or amperage draw will be higher than specified, causing damage to one or more components. The operating pressure can also be lower than required, resulting in low product water production and poor product water quality.

Table 1: 12 VDC, 24 VDC and Alternating Current 60 Hz powered Systems

Ultra Whisper Model	Product Water Production (GPD / LPD)	Pump Elect. Motor	Feed Pump Flow (GPH/LPH)	R.O. BOOST Recovery (Percentage)	RO Membrane Element Size Code	Pressure Vessel Size Code
UW 400	400/1514	1/3 H.P.	140/530	13%	C	C
UW 600	600/2271	1/2 H.P.	215/814	13%	C	C

Table 2: Alternating Current 50 Hz powered Systems

Ultra Whisper Model	Product Water Production (GPD / LPD)	Pump Elect. Motor	Feed Pump Flow (GPH /LPH)	R.O. BOOST Recovery (Percentage)	RO Membrane Element Size Code	Pressure Vessel Size Code
UW 400	396/1499	1/3 H.P.	190/720	13%	C	C
UW 600	600/2271	1/2 H.P.	215/814	13%	C	C

System Pressure

Table 3: Seawater @ 35,000 PPM and 77 F / 25º C.

	Feed Pump Nominal Discharge Pressure into R.O. BOOST				Nominal Operating Pressure Developed by R.O. BOOST at RO Membrane Element			
Model	PSI	BAR	Kg/cm2	kPa	PSI	BAR	Kg/cm2	kPa
UW 400	160	11	11.2	1103	650	45	45.6	4482
UW 600	175	12	12.3	1206	690	47	48.5	4757

Performance

Table 4: 12 VDC, 24 VDC and 60 Hz powered Systems

	Product water per 1 hour of operation:		Product water per 24 hours of operation:	
Model Number	U.S. Gallons	Liters	U.S. Gallons	Liters
UW 400	16.7	63	400	1514
UW 600	25	95	600	2271

Table 5: 50 Hz powered Systems

	per 1 hour of operation:		per 24 hours of operation:	
Model Number	U.S. Gallons	Liters	U.S. Gallons	Liters
UW 400	16.5	62.5	396	1499
UW 600	25	95	600	2271

- SALT REJECTION (CHLORIDE ION): Minimum 99.2 %, Average 99.4%
- PRODUCT WATER TEMPERATURE: Ambient to feed water temperature
- SALINITY MONITORING: Automatic computer controlled electronic monitoring. Temperature compensated with Water Quality Indicator. The salinity monitoring components of the System give a continuous readout in micro-ohms per cubic centimeter, are temperature compensated and of a fail-safe design.
- FEED WATER SALINITY RANGE: up to 50,000 PPM TDS (NaCl), typical seawater salinity is 35,000 PPM.
- FEED WATER TEMPERATURE RANGE: Max. 122°F / 50°C, Min. 33°F / .5°C.
- FEED WATER pH RANGE: 3-11 (typical seawater pH is 8)
- CHLORINE TOLERANCE: 0.1 PPM.
- REVERSE OSMOSIS (RO) MEMBRANE: Specifically selected High Rejection/High Yield aromatic tri-polyamides, thin film composite, spiral wound, single pass RO Membrane Element.

External Installation Water Connections

Pipe sizes to be supplied by the installer for connection of the Sea Recovery supplied components

- Feed Inlet: 1/2” MNPT Male National Pipe Thread U.S. Standard
- Brine Discharge: 1/2” MNPT Male National Pipe Thread U.S. Standard
- Product: 1/4” FNPT Female National Pipe Thread U.S. Standard

Feed Water Pump Motor Electrical Specifications

12 and 24 VDC	UW 400 12V / 24V	UW 600 24V
Nominal Operating Amps	21/10.5	33/16.5
Maximum Motor Amps	28/13.4	39/19.5
Starting Amps	45/22.5	65/32.5
Horse Power	0.3	0.5
Recommended Circuit Breaker	50/25	70/35
Minimum Size Power Wire AWG	6/8	6/8
Minimum Size Power Wire mm2	13/8	13/8

115 and 230 VAC 60 Hz	UW 400 115V / 230V	UW 600 115V / 230V
Nominal Operating Amps	5.3/2.7	7.5/3.7
Maximum Motor Amps	6.6/3.5	8.6/4.3
Starting Amps	25/12.5	46/23
Horse Power	0.3	0.5
Recommended Circuit Breaker	10/5	10/5
Minimum Size Power Wire AWG	12	12
Minimum Size Power Wire mm2	3	3

110 and 220 VAC 50 Hz	UW 400 110V / 220V	UW 600 110V / 220V
Nominal Operating Amps	5.1/2.5	7.3/3.5
Maximum Motor Amps	5.2/2.7	7.4/3.7
Starting Amps	26/13	44/22
Horse Power	0.3	0.5
Recommended Circuit Breaker	10/5	10/5
Minimum Size Power Wire AWG	12	12
Minimum Size Power Wire mm2	3	3

Operating Amperage

Nominal Operating Amperage will increase if any of the following conditions exist:

- The Feed Water Temperature is lower than 77º Fahrenheit / 25º Celsius.
- The Feed Water Salinity is greater than 35,000-PPM TDS (3.5% Total Dissolved Solids).
- The RO Membrane Element becomes fouled.
- The RO Membrane Element is new and on the -15% side of the specifications.

Nominal Operating Amperage will decrease if any of the following conditions exist:

- The Feed Water Temperature is higher than 77º Fahrenheit / 25º Celsius.
- The Feed Water Salinity is less than 35,000-PPM TDS (3.5% Total Dissolved Solids).
- The RO Membrane Element is new and on the +15% side of the specifications.

Weight

MODEL	WEIGHT	MODEL	WEIGHT
UW Compact 400	145 lbs. / 65.8 kg	UW Modular 400	140 lbs. / 63.5 kg
UW Compact 600	155 lbs. / 70.3 kg	UW Modular 600	150 lbs. / 68.0 kg

Chapter 4

System and Components Description

All components supplied by Sea Recovery, both standard and optional, are described in this chapter, along with items that the installer must provide.

ALL STANDARD COMPONENTS AND ALL OPTIONAL ACCESSORIES.

** Denotes items supplied by installer

*** Denotes optional equipment

Component Functions and Descriptions

The Ultra Whisper System is broken down into six sub-sections:

1. Pre-filtration
2. Pressurization
3. Brine Discharge
4. Product Water and Optional Post Filtration
5. Fresh Water Flush and RO Membrane Element Cleaning
6. Electronic Controls

Pre-filtration Components

The Pre-filtration section of your System filters and delivers feed water. The raw feed water is filtered to remove suspended solids larger than 5 Microns (5/1,000,000 of a meter). Pre-filtration protects the High Pressure Pump from premature wear, and the RO Membrane Element from premature fouling.

1. Inlet Thru Hull Fitting with Forward Facing Scoop** is the point at which the Feed Water enters the System. The System's Installer must use a forward-facing scoop so that the System receives positive water flow as the ship is moving.

   Caution: A flush Inlet Thru-hull Fitting will create a vacuum as the ship is moving, thus causing loss of Feed Water flow and cavitation of the Booster and High Pressure Pump. This will result in continuous System shut down.

   Caution: The Installer must utilize a forward-facing scoop, so that the system receives positive water flow when the ship is moving. The fitting must be installed on the ship's hull, in a position that provides a continuous, air-free supply of Feed Water.

   Caution: The resulting failure of the system to remain in operation is attributed to improper installation. Thus, it is the Installer's liability, and will not be covered by the Sea Recovery Corporation warranty.

2. Sea Cock Valve** is used (for safety reasons) to close the Feed Water line during repair, maintenance and disuse of the System.
3. Feed Water Connector is attached to the Sea Cock Valve for connection of the Feed Water Suction Hose.
4. Sea Strainer filters out 90 Micron and larger particulate matter and suspended particles that would otherwise damage the Feed Pump and prematurely foul the cartridge Pre-Filter Element. The Sea Strainer has a blue bowl with a black body filter housing, which contains a screen filter element.

5. Feed Pump supplies a positive pressure through the Pre-filtration components and into the R.O. Boost. The Feed Pump flow and pressure causes the R.O. Boost to function.
6. Plankton Filter *** contains a cleanable ultra-fine Monel mesh screen. The mesh screen removes suspended solids or biological growth, such as plankton. It also provides longer life to the Pre-filter elements and, in turn, lowers System maintenance costs. The Plankton Filter is available as a single housing or dual housing. For additional information on obtaining this optional accessory, please contact Sea Recovery Corporation.
7. Check Valve Tee Assembly connects to the Feed Water Line, FWF Feed Water Line, and the Pre-Filter Housing.
8. Low Pressure Transducer is located on the RO Boost Inlet Gauge 0-300 PSI on the Front Panel. It will automatically shut the system off when sufficient pressure of 4 PSI is not provided to the Feed Inlet. It will also automatically shut the system off when pressure exceeds 215 PSI.
9. Pre-Filter 5 mμ removes suspended solids 5 Microns and larger to prolong the life of the membrane element.
10. AIR/OIL Separator will bleed air and oil before it enters the R.O. Boost. It helps performance of the R.O. Boost and prolongs the life of and protects the Reverse Osmosis Membrane from fouling.

Caution: Do not use “string-wound” or “fiber” pre-filter elements. String-wound and fiber-filter elements are designed for the Photographic Film Developing Industry. When used in sea water, they will plug much more rapidly (performance has shown within 1/10th of the time) than a Sea Recovery-supplied, Pre-filter cartridge element. This will cause frequent System shut downs and element replacement.

Danger: Do not use third-party pre-filtration components! Use only Sea Recovery Corporation pre-filtration components. Third-party pre-filtration components do not fit properly, thus causing the seams to fall apart. They also allow bypass, which results in extensive damage to the High Pressure Pump, as well as to premature fouling of the RO Membrane Element.

Pressurization Components

The Pressurization section of your System supplies the proper pressure across the Membrane Element to produce the required product water within a safe operating condition. Proper pressure and proper flow across the Membrane Element are two basic requirements of Reverse Osmosis.

1. Energy Transfer Device (R.O. BOOST) “enhances” (increases) pressure from the Feed Pump by approximately a 4:1 or 5:1 ratio.
2. Pressurized water from the feed water enters the RO Boost from the R.O. BOOST port "LP IN". Pressurized water returns from the RO Membrane Element. This pressurized water entering the Return Chamber of the R.O. BOOST port “R” assists the R.O. BOOST as recovered energy. This allows the R.O. BOOST to deliver the required flow and pressure to the RO Membrane Element with minimal power consumption.
3. The Low Pressure Gauge 0-300 PSI is a stainless steel glycerin filled pressure gauge that is used to monitor the high pressure of the Feed Water developed by the R.O. BOOST.
4. High Pressure Hose, R.O. BOOST Outlet port "HP OUT"/MVA inlet transfers pressurized Feed Water from the R.O. BOOST to the inlet of the RO Membrane Element.
5. High Pressure Transducer is located on the R.O. BOOST above the "HP OUT." It will automatically shut the system off when the pressure exceeds 925 PSI.
6. RO Membrane Element and Pressure Vessel allows potable water molecules to pass through while rejecting the salt ions. Only 13% of the Feed Water becomes Product Water. The remainder (concentrated brine) transfers energy back into the R.O. BOOST, and then becomes Brine Discharge, which carries the rejected salt ions out of the Membrane Element.
7. High Pressure Hose, MVA Outlet / R.O. BOOST Return port “HP IN” transfers pressurized Brine Water from the Membrane Vessel Assembly back to the R.O. BOOST.

Brine Discharge Components

The Brine Discharge section of your System transfers brine exiting the R.O. BOOST back to the Feed Water source.

1. Brine Discharge Tee Connector allows for the Brine Discharge Hose to connect to the Thru Hull Over Board Discharge Fitting.
2. Thru Hull Discharge Fitting** should be installed above water level for discharge of the Brine Discharge Water from the System.

Product Water and Post-Filtration Components

This section collects the product water as it exits the RO Membrane Element. The product water is tested for quality at the salinity probe, enters a 3-Way Product Water Diversion Valve, and then is measured for flow. When the Product Water Salinity decreases to the “safe” level, it is then diverted into the Post Filtration components, which are the final steps in Product Water quality control.

1. Product Water Manifold allows transfer of product water flow through the components attached to it.
2. Temperature Compensated Salinity Probe electronically determines whether the salinity content of the Product Water has decreased to the “safe” level. This Salinity Probe retains an accurate reading throughout varying temperature ranges.
3. 3-Way Product Water Diversion Valve, Electric Solenoid Actuated. The Salinity Controller energizes this valve to the “Potable” position when the System produces water, which meets the low salinity requirement. If the Product Water being produced is “un-potable” or high in salinity, then no signal is sent to the valve and it remains in the normally open position. The “fail safe” normally open position diverts the un-potable Product Water to discharge through the Brine Discharge Tee Connector.
4. Flow Meter, Product Water measures the rate of Product Water flow in gallons per hour from the RO Membrane Element.
5. Charcoal Filter is designed to remove foul odors from the Product Water. Sulfurous smell (rotten egg smell) is caused by decaying biological matter in the Feed Water. Fresh water flushing of the System helps to minimize the source of this odor.
6. pH Neutralizer Filter*** The Product Water produced by Reverse Osmosis is slightly acidic. The pH Neutralizer Filter neutralizes the pH of the Product Water.
7. UV Sterilizer*** sterilizes up to 99.9% of viruses, bacteria and other micro-organisms that may pass through the RO Membrane Element. The UV sterilizer is recommended if the Product Water Storage Tank is not treated by chlorination, etc.
8. Potable Water Storage Tank Tube Connector is used to connect the Systems Potable Product Water output to the Potable Water Storage Tank.
9. Potable Water Storage Tank** may be any container suitable for storing Potable Water.

Fresh Water Flush and RO Membrane Element Cleaning

The Fresh Water Flush rinses the high salinity Feed Water from the System with Fresh Water. This process is automatic at each shut down of the System and repeats automatically every 7 days. Fresh Water Flushing replaces the seawater in the System with less corrosive fresh water. This reduces the biological growth that naturally occurs if the Feed Water (sea water) is left to stand in the System. Optional, manually operated valves are also available for ease of rinsing and cleaning the RO Membrane Element.

1. Fresh Water Flush Solenoid Valve, included with the Filter Skid Assembly. The Fresh Water Flush Solenoid Valve draws fresh water from the Potable Water Storage Tank and allow the boats supply pump push the water, at 30-55 PSI, through the Fresh Water Flush Charcoal Filter and into the rest of the System.
2. Fresh Water Flush Carbon Filter, included with the Fresh Water Flush Assembly. The Carbon Filter removes particulate matter and chlorine from the fresh water to prevent chlorine attack to the RO Membrane Element.
3. Fresh Water Flush Check Valve, included with the Fresh Water Flush Assembly. The Check Valve routes the fresh water to the System and prevents the fresh water from expelling out the Inlet Thru Hull Fitting.
4. Inlet Rinse Clean Valve*** used in conjunction with the Discharge Rinse Clean Valve simplifies the storage and cleaning procedures by allowing the operator to turn a valve rather than disconnect a hose. Also used for a manual fresh water flush if the Automatic Fresh Water Flush System is not installed.
5. Discharge Rinse Clean Valve*** used in conjunction with the Inlet Rinse Clean Valve simplifies the storage and cleaning procedures by allowing the operator to turn a valve rather than disconnect a hose.
6. Rinse/Clean Solution Container** used to hold rinse water, storage solution, winterization solution, or cleaning solution may be any 5 gallon or larger container (portable or permanently installed).

Electronic Components

The System's electronic components measure water quality, control the direction of Product Water flow, Start and Stop the System, and contain the central electrical connection point. They also ensure only potable Product Water passes into the Product Water Storage Tank.

1. Salinity Controller monitors the salt content of the product water via the Salinity Probe, and signals the 3-Way Product Diversion Valve when Potable Water is being produced. The 3-Way Product Diversion Valve, Feed Pump Motor, Remote Control, UV Sterilizer, and Soft Motor Starter are each governed by this Controller. This enclosure also contains the high-voltage components of the system. It serves as the connection point for all the electrical systems such as the motors, transducers, and valves.
2. Remote Controller*** allows for remote monitoring and controlling of the system.
3. Soft Start*** used only in AC (Alternating Current) Single Phase systems reduces by 40% the initial startup amperage required to start the Feed Pump Motor and in turn allows a smaller sized KW generator to start the system.

Plumbing Connections

1. Tube-Fitting Connections and Assembly:
   a) Cut tube end square and clean.
   b) Loosen nut on fitting three turns.
   c) Wet the end of the tube and insert tube into fitting until it bottoms. Loosen nut completely and remove tube with attached parts from body. Check to ensure that the O-ring is seated onto the tube under the spacer (and not pinched into the body). Insert tube with attached parts into the body and tighten nut finger-tight.

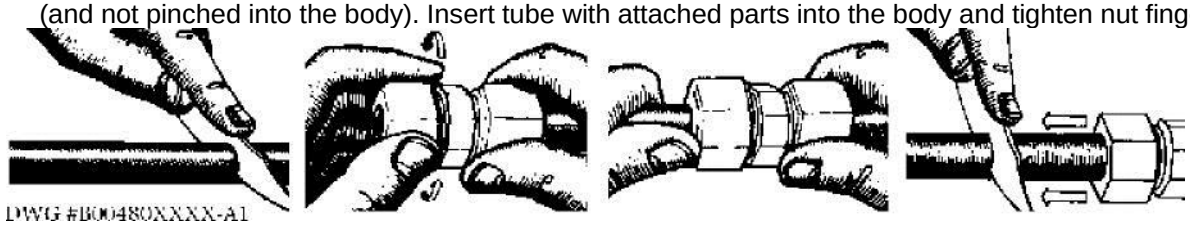

2. Refer to the illustration below. Always allow slack in all tube and hose lines. Never cause the tube or hose to immediately bend from the fitting. Allow the line to enter or leave from the fitting in a straight manner for several inches to ensure proper connection, to relieve stress to the fitting and tube or hose, and to allow ease of detachment and reattachment during maintenance or repair. If water lines are pulled tight causing them to bend at the fitting, they will leak, allow air to enter, fail prematurely and/or break the fitting that they are attached to.

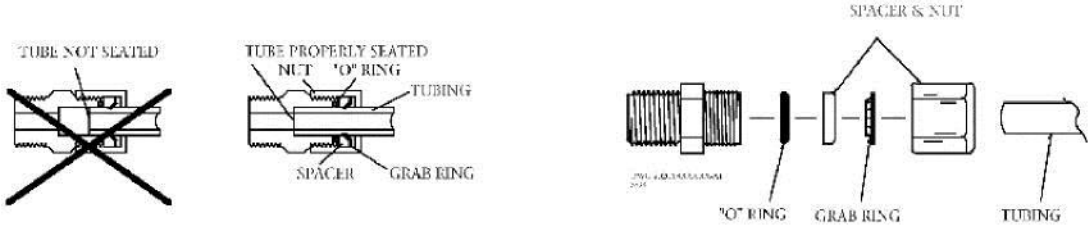

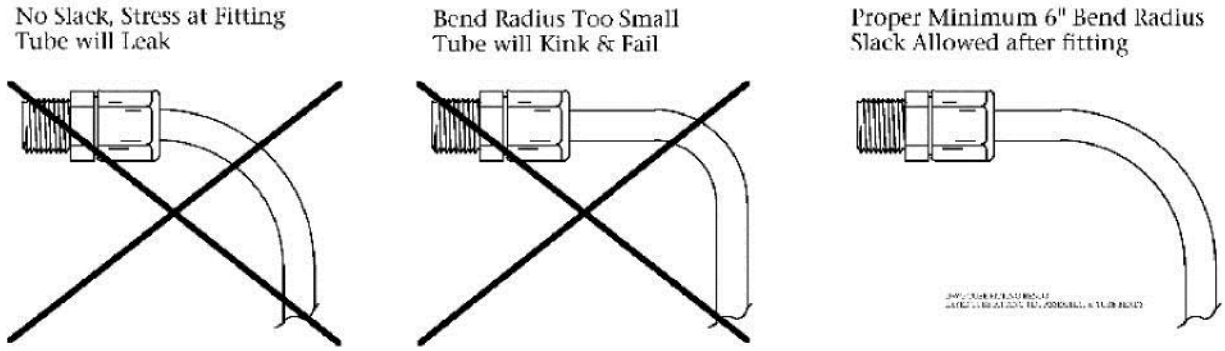

3. Ensure all suction hose connections use two hose clamps rotated 180 degrees with the screw heads facing the same direction. Remove any flash on the hose-barb fittings using fine sandpaper.

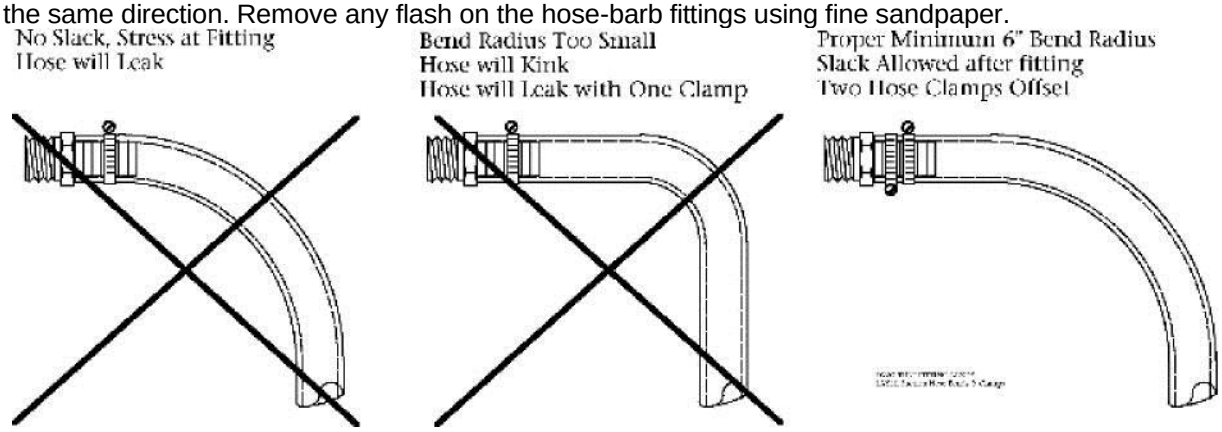

4. Ensure all high-pressure hoses have sufficient slack and are not pulled tight into a sharp or immediate bend.

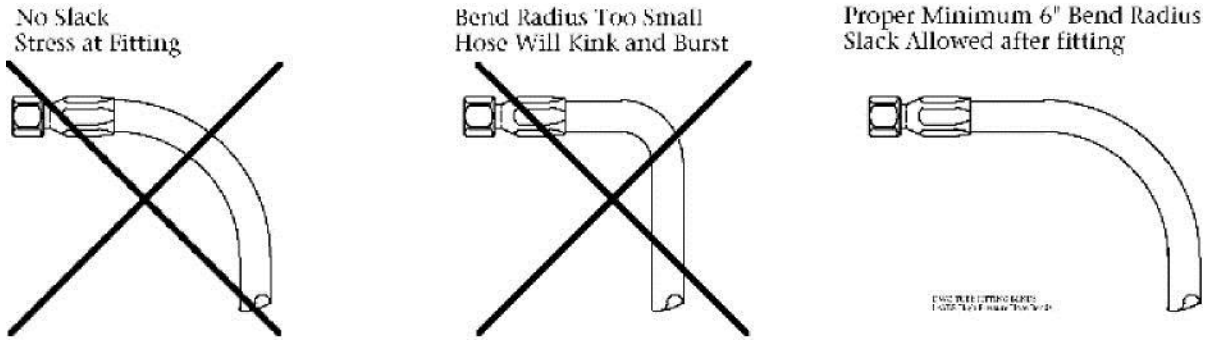

Chapter 5

Pre-Installation Safety

Ensure that you-as the Installer, Operator or both-read and understand the prerequisites, warnings and important notes within this topic.

Storage Prior to Uncrating

You must adhere to the following crate markings:

- **DO NOT** store in direct sunlight
- **DO NOT** store above 120°F (50°C)
- **DO NOT** allow the System to freeze (do not store below 32°F (0°C))
- **DO NOT** store longer than four (4) months without flushing with storage chemical
- Store only on base with **ARROWS UP**
- Keep the RO Membrane Element wet at all times

Uncrating

- **DO NOT DISCARD ANY PACKAGING UNTIL YOU HAVE FOUND AND IDENTIFIED ALL PARTS!**
- Remove the Ultra Whisper system from the shipping carton. Note that some of the components are loose and/or separately packaged in the shipping container.
- Refer to the Illustrated Packing List pages to identify and confirm the contents of the Shipping Crate.
- **USE CAUTION WHEN TROUBLESHOOTING. DO NOT PERFORM MAINTENANCE UNLESS THE FOLLOWING CONDITIONS ARE MET:**
- The System Feed Water Sea Cock Valve is closed.
- The system main electrical disconnect switch is switched OFF, LOCKED, and TAGGED.
- **CAUTION: ELECTRICAL SHOCK HAZARD!** A Volt / Ohm Meter will be necessary. The Installation procedures expose the Installer to High Voltage and electrical shock hazard. Only attempt this if you are a qualified electrician and only if surrounding conditions are safe.

Tools required for Installation

Not all installations are typical; therefore, it is recommended to have a full set of Mechanic's, Plumber's, and Electrician's tools available. No special system tools are required for installation. A separate TDS Meter, available from Sea Recovery, will assist in confirming System product water quality. A volt/ohm meter (VOM) is required for system installation and commissioning to ensure proper electrical power and connection.

Chemical Precautions

Danger: The RO Membrane Element is susceptible to chemical attack. Take extreme caution in handling and storing! Do not expose your Ultra Whisper RO Desalination System to feed water containing chemicals not approved in writing by Sea Recovery Corporation.

Do not connect a water line to your *Ultra Whisper RO Desalination System* that may contain any of the following chemicals:

- Hydrogen peroxide Chloramines-T

- Chlorine dioxide chlorine
- Bromine phenolic disinfectants
- Chloramines N-chlorioisocyanurates
- Hypochlorite iodine
- Bromide petroleum products

Important: The use of non-authorized and/or the misuse of authorized chemicals will void your Sea Recovery Corporation warranty! For example, DO NOT connect the System's inlet to your ship's potable water system if it contains chlorinated or brominated water. These chemicals destroy the copolymer components and the oxidants will damage the RO Membrane Element. In this situation, you can use the optional Sea Recovery Fresh Water Flush Accessory to remove the chlorine and bromine from your ship's potable water system before connecting the Ultra Whisper RO Desalination System.

System Safety Check

Danger: Do not perform installation, maintenance or troubleshooting procedures until you have verified the conditions below.

- The System's Feed Water Sea Cock Valve is closed.
- The System's main electrical disconnect switch is **OFF**, **LOCKED** and **TAGGED**.

Installer Minimum Qualifications

The System's Installer must have technical expertise in the following areas:

- Electrical, Electronic, Electric Motors and Circuits
- Electromechanical and Mechanical Systems
- Hydraulic and Liquid Pressure and Flow Systems
- Piping and Plumbing Systems
- Water Suction and Pressure Lines
- Thru-Hull Fitting below and above water level

Warnings

Danger: ELECTRICAL SHOCK HAZARD! The Ultra Whisper RO Desalination System installation procedures expose the installer to high voltage and potential electrical hazards. Technicians should only attempt installation if (1) they are qualified electricians and (2) surrounding conditions are safe.

Caution: Do not attempt Installation, commissioning, troubleshooting, or repair of the Ultra Whisper RO Desalination System unless you are proficient in the fields/functions listed within the chapter Installer Minimum Qualifications.

Caution: The RO Membrane Element is stored in sodium bisulfite. Avoid skin and eye contact with this packaging solution. If skin contact occurs, rinse skin thoroughly with water. If eye contact occurs, flush eyes repeatedly with water and notify a physician immediately.

Caution: Never mount the liquid holding component above any electrical or electronic device. Extensive damage to the electronic device will result if liquid enters device during maintenance and/or component failure.

Important: Do not over-tighten PVC fittings. If threaded pipe fittings leak after installation, remove the fitting, clean the mating threads, apply three (3) to four (4) wraps of Teflon tape to the male threads, apply liquid Teflon pipe sealer sparingly, and thread the parts back together. PVC fittings should be hand tightened, without the use of a wrench.

Important: The Sea Cock Valve, Inline Pressure Gauge, Sea Strainer, Rinse Clean Inlet Valve, and Feed Pump should be installed below water level. This will aid the Feed Pump in priming.

Important: Always allow hoses and tubes to enter and exit straight from the connection for a minimum of 1 in. prior to a bend. If stress is placed on the fitting due to a tight bend, the fitting will leak and may break.

Important: All connection lines should be as short and straight as possible using minimum fittings. Ensure that they are not “kinked.”

Important: Ensure that the power source is sufficiently sized to provide the correct voltage and cycles during System start up and operation.

Remember: Install the system and its supporting components in an accessible manner.

Special Considerations

Length of Connection Lines

- All connection lines should be as short and straight as possible using minimum fittings.
- Increased length causes vacuum and line-loss in the Suction chapter of the Feed Water line.
- Increased length causes pressure loss in the Pressurized chapter of the Feed Water line.
- Increased length causes excessive pressure build up in the Brine Discharge line.
- Increased length causes excessive pressure build up in the Product Water line.
- The connection lines must not be kinked.
- Kinks in the Feed Water line cause Feed Pump cavitation and continual System shut down.
- Kinks in the Pressurized chapter of the Feed Water line can cause excessive pressure build up and damage, as well as loss of required pressure to the R.O. BOOST.
- Kinks in the Brine Discharge line can cause excessive pressure build up and damage.
- Kinks in the Product Water line can cause excessive pressure build up and damage.

Accessibility

- Install the system and supporting components in an accessible manner. The Ultra Whisper System requires regular operator maintenance such as filter element changing. As with any Electro Mechanical system utilized in the Marine environment, the Ultra Whisper System will require repair from time to time. Hidden or out of reach items may become forgotten, not maintained, and cause damage to other system components.
- The Electrical Control Panel Touch Pad must be accessible for operation of the System.
- The R.O. BOOST and RO Membrane Element Pressure Vessel must be accessible for Membrane Element cleaning, rinsing, storing, and winterizing.
- Sea Strainer, Pre-filters, Charcoal Filter, and pH Neutralizer must be accessible for user changing.

Components Supplied by the Installer or Owner

Caution: All fittings, valves and piping installed prior to, within, and after the Sea Recovery Reverse Osmosis System must not contain iron; they must be non-ferrous material (not containing iron). Iron fittings or piping will cause rust fouling and failure of the RO Membrane Element. The resulting failure of the RO Membrane Element is attributed to improper installation, is the liability of the installer and is not covered by the Sea Recovery Reverse Osmosis Warranty.

Water Connections for Ultra Whisper Hook up to be Supplied by the Installer

1. Feed Inlet: 1/2” MNPT Male National Pipe Thread U.S. Standard

2. Brine Discharge: 1/2” MNPT Male National Pipe Thread U.S. Standard
3. Product: 3/8” FNPT Female National Pipe Thread U.S. Standard

Inlet Thru-Hull Fitting with Forward Facing Scoop

The inlet thru-hull fitting must be dedicated to only the Sea Recovery Reverse Osmosis System. It is important that the installer utilizes a forward facing scoop so that the system receives a positive flow of water while the boat is underway. The fitting must be installed on the boat’s hull in a position that provides continual feed water flow without air to the system.

Caution: A flat or flush inlet thru-hull fitting will cause a vacuum as the boat is under way and this will cause loss of feed water flow and cavitation of the Feed pump resulting in continual System shut down due to low feed water flow and pressure. The resulting failure of the System to remain in operation is attributed to improper installation, is the liability of the installer, and is not covered by the Sea Recovery Reverse Osmosis warranty.

Caution: If the thru-hull fitting is placed in a position that allows air to continually enter the thru-hull fitting this will cause the system to continually shut down due to loss of feed water. The resulting failure of the System to remain in operation is attributed to improper installation, is the liability of the installer, and is not covered by the Sea Recovery warranty.

Caution: The Sea Recovery Reverse Osmosis System must not be tied into another existing auxiliary water line already supplying another accessory on the boat. Connecting the Sea Recovery RO System into a thru-hull fitting already supplying other equipment will cause the Sea Recovery RO System to draw air or cavitate leading to continual system shut-down or may starve the other equipment.

Caution: The Sea Recovery Reverse Osmosis System must not be tied into another existing reject overboard auxiliary water line, already supporting another accessory on the boat. Connecting the Sea Recovery RO System into a thru-hull fitting already supporting other equipment will cause the Sea Recovery RO System build excessive pressure or bursting reject water line. Damage to and failure of the system due to a connecting into auxiliary reject overboard line will not be covered by the Sea Recovery Warranty.

Caution: If the Sea Recovery RO System is connected to a Sea Chest or Stand Up Pipe, DO NOT plumb the Sea Recovery RO System feed line to the “top” of the Sea Chest or Stand Up Pipe. If plumbed into the top of these feed water arrangements, the Sea Recovery RO System will experience continual shut-down due to air inducement into the system. Plumb the Sea Recovery RO System to the “bottom” of such feed water arrangements to ensure a continual air-free supply of feed water to the system.

The resulting failure of the system to remain in operation due to any of the above improper installation is the liability of the installer and is not covered by the Sea Recovery Reverse Osmosis Warranty.

- Inlet Sea Cock Valve quarter-turn ball valve min. 1/2” size, with a 1/2” MNPT connection for mating to the supplied 1/2” FNPT fitting.
- Brine Discharge Thru-Hull Fitting minimum 1/2” size with a 1/2” MNPT connection for mating to the supplied 1/2” FNPT fitting. The Brine Discharge Thru-Hull Fitting should be installed above water level. No valves should be installed in this line. Damage to and failure of the system due to a closed valve will not be covered by the Sea Recovery Warranty.
- Connection of the Potable Water Storage Tank Tube Connector to the boat’s Potable Water Storage Tank requires a 1/4” FNPT connection for mating to the supplied 1/4” MNPT fitting. In order to avoid problems such as reverse flow (osmosis) from the tank to the system and chlorination attack of the RO Membrane Element, the fitting must terminate above the maximum water level. Tying into the tank fill line is a good choice. No valves should be installed in this line. Damage to and failure of the system due to a closed valve will not be covered by the Sea Recovery Reverse Osmosis Warranty.
- Connection of the Sea Recovery Freshwater Flush subassembly to the boat’s pressurized potable water line requires a 3/8” FNPT connection for mating to the 3/8” MNPT fitting supplied with the Freshwater Flush subassembly.
- Circuit Breaker with appropriate amperage rating.
- Properly-Sized Power Cables.
- An electrical power source capable of delivering the required constant voltage and cycles during start-up and operation of the system.

Chapter 6

Installation

System and Component Mounting

The following instructions discuss the placement and mounting of the Ultra Whisper Compact and Modular system components. If an optional accessory has not been included in your system, then please ignore that step and move to the next.

Caution: Mounting surfaces must be flat in order to avoid warping of brackets and frames. Use appropriate shims on uneven surfaces to ensure that mounting of the system components does not cause bending or warping, and subsequent leaking or breakage. Damage to any system component due to attachment to uneven surfaces is the responsibility and liability of the installer and is not covered by the Sea Recovery Warranty.

- **ATTACHMENT**: All individual components are supplied with common mounting hardware. Some installations may require different hardware than what has been supplied.
- **SUPPLIED HOSE AND TUBE LENGTHS:** When planning out the location and mounting of the system and related components, give consideration to the length of hose and tube supplied with the system.

1. Attach the supplied Feed Water Connector Assembly, 1/2 “FNPT elbow with attached 5/8” hose barb, to the boat’s Sea Cock 1/4 turn ball Valve. Position the Outlet Hose Barb toward the Sea Strainer Inlet.
2. Attach the supplied Brine Discharge Tee Connector Assembly, 1/2 “FNPT elbow with attached 3/8” Tube Fitting to the boat’s overboard discharge fitting. Position the Inlet Tube Fitting toward the System Brine Discharge.
3. Attach the supplied Potable Water Storage Tank Tube Connector 1/4” MNPT x 1/4” Tube Fitting to the 1/4” FNPT tap at the Potable Water Tank. The product water line may also be attached to the potable water storage tank fill line rather than drilling and tapping into the top of the tank itself.

   Caution: Do not use water tank diversion valves in this line to fill more than one tank. If it is absolutely necessary to use a diversion valve to fill more than one tank, use only a “never-closed”-type ball valve, which allows water to flow regardless of the valve handle position. If a valve in this line is closed during operation, extensive damage to the system will occur. Damage caused to the system due to installation of valves in the product water line is the responsibility and liability of the installer and is not covered by the Sea Recovery Warranty.

4. The Sea Strainer is mounted in an accessible location below water level between the Inlet Sea Cock Valve and Feed Pump. Allow at least 4 inches (10 cm) of clearance below the bowl to access the mesh screen for cleaning or replacement.
5. The ***Inlet Rinse Clean Valve is mounted in an accessible location below water level between the Sea Strainer Outlet and the ***Fresh Water Flush Check Valve Inlet if used, otherwise the Feed Pump Inlet.
6. The Feed Pump is mounted at or below water level to assist the pump in priming. Mount the Feed Pump between the Sea Strainer Outlet and the ***Plankton Filter Inlet if used, otherwise the Pre-Filter Inlet. It is best to mount the Feed Pump below water level to assist priming and in an accessible location to allow access for maintenance.

   Caution: Do not mount the pump head vertically above the motor, as motor damage will occur if the pump or its fittings should develop a leak. Eventually, the pump seal will wear and leak from use requiring replacement. Water damage to the motor, if mounted improperly, is the responsibility and liability of the installer and not covered by Sea Recovery Warranty

Caution: Mounting of the Feed Pump above water level will cause a vacuum at the inlet of the pump and will result in premature wear resulting from cavitation. Improper installation of the Feed Pump causing excessive vacuum at the inlet of the pump resulting in cavitation and premature wear is the responsibility and liability of the installer and not covered by the Sea Recovery Warranty.

7. The ***Freshwater Flush Filter Canister with attached Flush Pump is mounted in an accessible location to a vertical surface between an unpressurized line in the potable water system and the Freshwater Flush Check Valve. Allow at least 4 inches (10 cm) of clearance below the bowl for element replacement.

Caution: Potable water may spill during filter element replacing. Therefore, do not mount the Pre-filter above any electrical or electronic component.

8. The ***Freshwater Flush Check Valve Assembly is mounted vertically in close proximity to the outlet of the Feed Water Pump and the inlet of the Plankton Filter or 25-micron Pre-filter.
9. The ***Plankton Filter is mounted in an accessible location to a vertical surface between the Feed Pump Outlet and the Pre-Filter Inlet, which is mounted to the system frame. Allow at least 4 inches (10 cm) of clearance below the bowl for element replacement.

Caution: Feed water may spill during filter element replacing. Therefore, do not mount the plankton filter above any electrical or electronic component.

10. The Pre-filters are mounted to the system frame. They may be removed from the system frame and mounted separately in an accessible location to a bulkhead. Allow minimum 4 inches (10 cm) below the bowl for filter element removal.

Caution: Feed water may spill during filter element replacing. Therefore, do not mount the Pre-filter above any electrical or electronic component.

11. The system frame is mounted in an accessible location to a flat surface allowing ease of access to controls and for maintenance.
12. The Charcoal Filter is mounted in an accessible location to a vertical bulkhead. Allow minimum 4 inches (10 cm) below the bowl for filter element removal.

Caution: Product water may spill during filter element replacing. Therefore, do not mount the charcoal filter above any electrical or electronic component.

13. The ***pH Neutralizing Filter is mounted in an accessible location to a vertical bulkhead after the Charcoal Filter and prior to the UV Sterilizer.

Caution: Product water may spill during filter element replacing. Therefore, do not mount the pH Neutralizing Filter above any electrical or electronic component.

14. The ***UV Sterilizer is mounted to a bulkhead directly after the Charcoal Filter, or after the pH Neutralizing Filter if used. The UV Sterilizer should be mounted vertically with the electrical fitting on the top. The UV should be plumbed with the inlet on the bottom and the outlet on top. Horizontal mounting is acceptable with outlet port on top (pointed up) to displace air. Do not mount the UV Sterilizer with the electrical fitting on the bottom.
15. The ***Discharge Rinse Clean Valve is mounted in an accessible location between the System Brine Discharge Outlet and the Brine Discharge Thru-Hull Fitting. Mount this valve in an accessible location.
16. The ***Remote Controller is mounted to a flat surface with appropriate cut out for flush mounting to the flat surface. Mount the Remote Controller in a protected area away from water spray.

Electrical Connections

1. Remove the front cover from the system controller to access the Main Terminal Strip and PC Board.

2. Connect main power using cable recommendations. The main power cable is inserted through one of the large strain reliefs on the side of the controller enclosure.
3. Connect the Feed Pump motor power through the other large strain relief on the side of the controller enclosure to terminals.
4. Connect UV Sterilizer using supplied purple cable. Loosen the other small strain relief on the side of the controller enclosure and insert the purple cable. Connect to the PC Board.
5. Remote Control: Close supplied square relief around the flat cable and snap together. Insert into square cutout on side of controller. Connect other end to modular plug on PC Board.

Hose Lines

BRINE DISCHARGE - 1/2" BLACK TUBE

Use the 1/2" black tube to connect the 1/2” tube on fitting the left side of frame labeled “Brine Discharge” to the 1/2” tube fitting on the Reject Water Assembly. The Reject Water Assembly should be connected to the Thru-Hull Discharge Fitting.

LOW PRESSURE LINES - 5/8" BRAIDED HOSE

Use the 5/8" Braided Hose to connect the hose barbed connection on the Inlet Thru-Hull Fitting to the hose barb on the Sea Strainer. Use another section of the 5/8" Braided Hose to connect from the hose barb on the Sea Strainer outlet to the hose barb on the Feed Pump inlet. Then, use another section of the 5/8" Braided Hose to connect from the hose barb outlet of the Feed Pump to the pre-filter skid hose barb tee inlet. Use another section of the 5/8" Braided Hose to connect from the bottom hose barb of the Air/Oil Separator to the hose barb on the Feed Inlet on the R.O. Boost LP IN.

PRODUCT LINES - 1/4” BLACK TUBE

Use the 1/4" black tube to connect the membrane vessel to the fitting on the frame marked Product. Use second section to connect from the fitting on top of the Salinity Manifold to the fitting connection on the Product /Brine Manifold. Connect a third section from the Product /Brine Manifold to the frame. Connect a fourth section from the frame to the carbon filter assembly. Connect the last section from the fitting on the carbon filter assembly to the fitting on the fresh water tank.

REJECT LINE CONNECTIONS

Use 3/8" black tube to connection of 3/8" tube fitting from the Bleed Outlet of the Air/Oil Separator to connect Bleed Inlet marked Bleed on the side of the frame. From the frame to another section of 3/8" tube to connect the Bleed connection on the brine manifold. Use a section of 1/2" tube to connect the Brine Discharge (B.1) elbow fitting to the Brine Discharge (B.2) on the Brine Manifold. Connect 3/8" tube from Brine flowmeter to the Brine connection on the Product / Brine Manifold. From the Brine Out of the Product / Brine Manifold to the Brine Discharge connection fitting on the to 3/8" tube fitting on the frame.

Required Hose and Tube Connections

** = Supplied by Installer or Owner

*** = Optional Accessory

1. Connect Feed and *Freshwater Flush Lines* with the supplied 20 feet (6 meters) of 1/2” (12.7 mm) I.D. Inlet Suction Hose. Secure the hose with two hose clamps offset 180 degrees at each fitting. Ignore any optional accessory that is not to be installed:

Step	from Outlet of:	to Inlet of:
1.	Feed Water Connector	Sea Strainer
2.	Sea Strainer	***Inlet 3-Way Clean/Rinse Valve (left or right port)
3.	**Rinse/Clean bucket or container	***Inlet 3-way Clean/Rinse Valve (left or right port)
4.	***Inlet 3-way Clean/Rinse Valve (center port)	Feed Pump
5.	Feed Pump	***Plankton Filter
6.	***Plankton Filter	Tee on Filter Skid
7.	Air/Oil Separator Outlet	R.O. Boost Inlet
8.	***Unpressurized Potable Water Tank Line*	*Freshwater Solenoid Valve on Filter Skid*

2. Connect Brine Discharge Line with the supplied 20 feet (6 meters) of 3/8” (9.5 mm) O.D. Brine Discharge Tubing:

Step	from Outlet of:	to Inlet of:
1.	*(For Modular)* R.O Boost *(For Compact)* Pre-Connected	Brine Manifold (on the bottom of the frame)
2.	*(For Modular)* Brine Manifold (on the bottom of the frame) *(For Compact)* Brine Discharge port (on the side of the frame)	***Discharge Rinse Clean Valve (center port)
3.	***Discharge Rinse Clean Valve (left or right port)	**Rinse Clean bucket or container
4.	***Discharge Rinse Clean Valve (left or right port)	Brine Discharge Outlet

3. Connect Product Water Line with the supplied 30 feet (9.14 meters) of 3/8” (9.52 mm) O.D. tubing:

Step	from Outlet of:	to Inlet of:
1.	*(For Modular)* Product Water Manifold Port 'A' On the bottom of the frame *(For Compact)* Potable Water line (on the right side of the frame)	Charcoal Filter
2.	Charcoal Filter	***pH Neutralizing Filter
3.	***pH Neutralizing Filter	***UV Sterilizer
4.	***UV Sterilizer	**Potable Water Storage Tank Connector

Ultraviolet (UV) Light Installation

The SP-Series UV unit is shipped with the UV lamp, quartz sleeve, fittings and O-rings and needs to be assembled before the UV unit can be used.

1. Install the UV unit in a sheltered, well-ventilated area.
2. Install the UV unit as close as possible to the point-of-use to avoid potential contamination discharge from pipes, fittings, etc.
3. The UV unit should be mounted on stable support to avoid straining or warping. Allow sufficient clearance around the unit for servicing.
4. Verify the location is free from vibration.
5. All UV units are rated for maximum operating pressure at 50psig (8.24 bar).
6. The UV unit must be properly grounded for safe and proper operation. Failure to properly ground the UV unit automatically voids all unit warranty.
7. Line voltage must be within 10.56V to 16.50V. Voltage outside the range will compromise the performance of the UV unit.

Plumbing Requirements

All piping, tubes and hoses leading to the UV unit connection points must be leak-free!

Note: UV unit may be installed horizontally or vertically. For vertical installation, make sure the inlet port is positioned at the bottom.

Note: Do not assemble or install damaged parts. Quartz sleeve and UV lamp are fragile and must be handled with care.

Install Fittings

Perform this procedure to prepare the UV unit for installation.

1. Inspect each port and fitting to ensure threads are free of dirt, burrs and excessive nicks. If threads are badly nicked, replace the fitting.
2. Wrap 1/4” wide PTFE tape 2 to 3 turns counterclockwise around the male threads of the 1/4” fitting. Do not wrap tape around the first thread.
3. Screw the fitting into cylinder ports to finger-tight position to achieve desired alignment.
4. Do not back off fitting. Do not overtighten fitting. Overtightening could strip the fitting threads and cause leak.

Install Quartz Sleeve

Perform this procedure only when water piping for UV unit is in place and ready for service.

1. Visually inspect quartz sleeve for cracks and damages.
2. Remove the four screws holding the ballast box cover and remove the cover.
3. Remove the rubber boot and pull out the 4-point lamp connector.
4. Remove the compression nuts.
5. Insert the close-end of the quartz sleeve into the cylinder through the ballast box pass-thru.
6. Allowing 1/2” of the quartz sleeve to expose on the viewport pass-thru.
7. Lubricate the tips of the quartz sleeve with clean water and insert new O-ring. Ensure the O-ring has all-round contact with the cylinder pass-thru.
8. Tighten the compression nut while making sure the nut does not contact the quartz sleeve. Adjust O-ring position as necessary. The compression nut should be snug and tight, do not over-torque.
9. Repeat Step 7 and 8 on the ballast box compression nut.

Connect Plumbing

Tube or hose ends must be cut squared and clean and have no rough edges. The quick fit elbow fitting has a C-clamp that will lock the tube in place once inserted.

1. Insert the supply pipe into one-cylinder port and label the port “Inlet.”
2. Insert the temporary pipe into the other cylinder port to direct water into a container.
3. Slowly fill the cylinder with water and flush cylinder for 1 minute.
4. Remove temporary pipe and insert the return pipe into the cylinder port and label the port “Outlet.”
5. Slowly pressurize the UV unit by filling the cylinder with water while checking for leaks.
6. If leaks are found on the compression nuts, depressurize the unit and slightly tighten the leaking compression nut.
7. Retest until a leak-free installation is verified.
8. Once UV unit is leak-free, the quartz sleeve installation is complete and the UV lamp can be installed.

Note: To remove tube from fitting, first remove the C-clamp then push fitting sleeve down. Once the fitting sleeve is down, pull the tube out of the fitting.

Install Lamp

Perform this procedure only after the quartz sleeve installation and leak-tests are completed successfully

1. Connect the UV lamp to the 4-point receptacle. If the lamp is not installed properly, lamp breakage will occur.
2. Insert lamp into quartz sleeve through compression nut pass-thru.
3. Install rubber boot over compression nut.
4. Connect unit power cable to power source.
5. Tighten the 4 screws to secure ballast box cover.
6. Turn ON the power to the unit.
7. Verify UV lamp operation from the viewport.
8. Allow one minute for the UV lamp to warm up prior to flowing water through the UV unit.

Caution: Use the viewport to verify the proper operation of the UV lamp.

Caution: Rapid successive cycling of the power to the ballast can cause premature failure of the unit.

Caution: Prior to energizing the lamp, make sure there is no water leaking from the quartz sleeve compression nuts.

Mounting the Unit

Once the UV unit is assembled and tested successfully, it can be mounted onto its permanent operational location. The unit must be mounted in a manner that will prevent excessive vibration and warping which will damage the quartz sleeve.

Operational Notes

- Release the pressure in the UV treatment chamber before breaking the compression nut seals.
- Disconnect all power to the UV unit before servicing.
- Do not allow the inlet water temperature to drop below 35°F (2°C).
- Do not allow the flow rate to exceed 2 GPM.
- Do not cycle the UV unit more than 3 "ON/OFF" cycles in a 24-hour period.
- Ensure all plumbing connections are tightly sealed before applying pressure.

- Before connecting the return tube, flush the unit to rinse out any debris left from the installation process.

Danger: UV LIGHT EXPOSURE CAN SEVERELY BURN AND DAMAGE EYES AND SKIN.

Danger: DO NOT look at the blue UV light. DO NOT operate the UV lamp outside of the UV treatment chamber.

Danger: The unit operates on high voltage and must be serviced by qualified personnel only.

Caution: Standard flow rate are based on water temperature 35°F to 100°F. If the inlet water temperature exceeds 100°F (38°C), please contact your local CSR.

Caution: Cycling more than 3 cycles will reduce the end-of-life (EOL) output and/or cause premature lamp failure.

SINGLE MEMBRANE

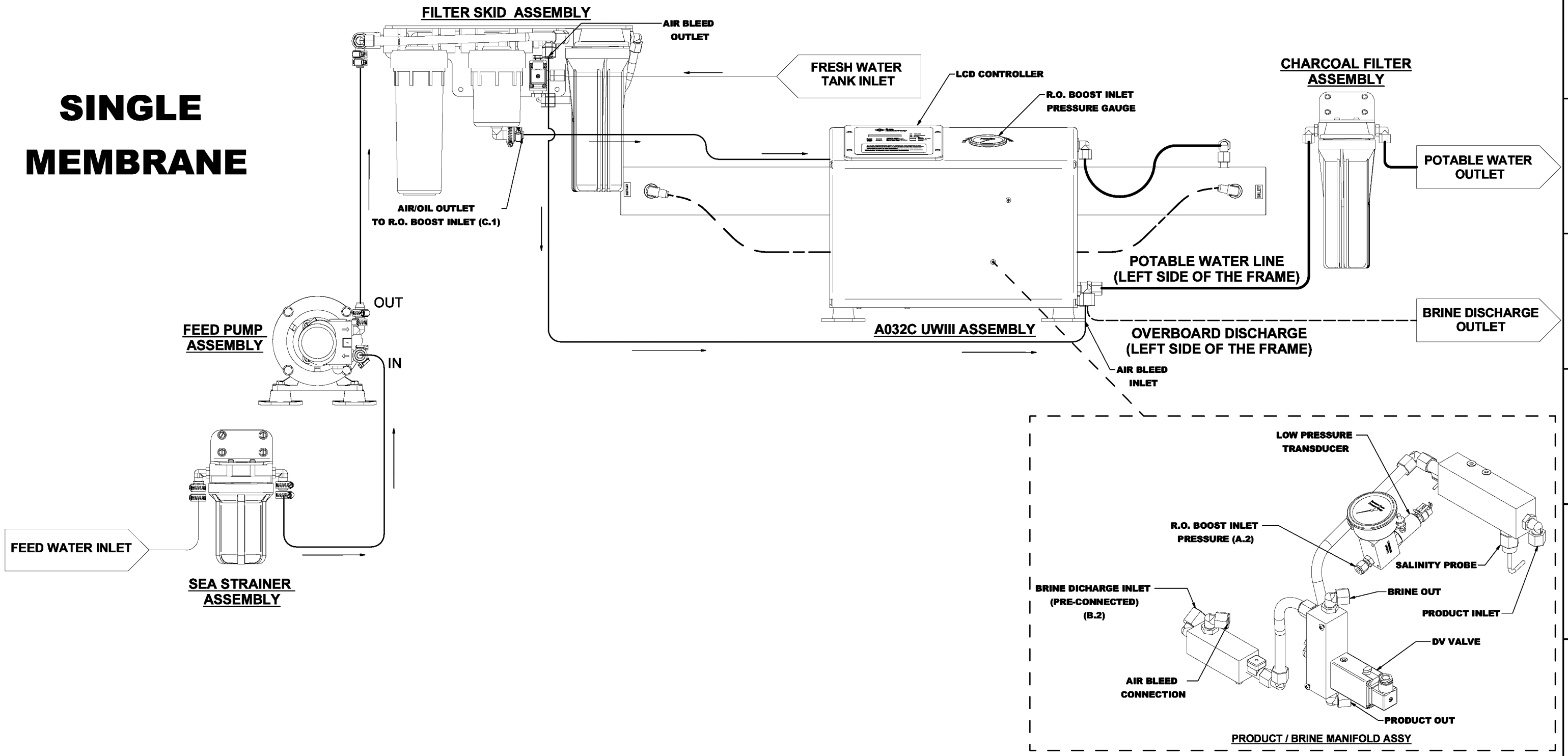

NOTES:
1. PRESSURE CONNECTION INDICATES BY:
   A - R.O. BOOST INLET PRESSURE
   B - BRINE DISCHARGE
   C - AIR/OIL - R.O. BOOST

LINE SYMBOLS

LINE CONNECTIONS BEFORE THE R.O. BOOST PUMP ASSEMBLY

BRINE LINE CONNECTIONS

POTABLE WATER LINE CONNECTIONS

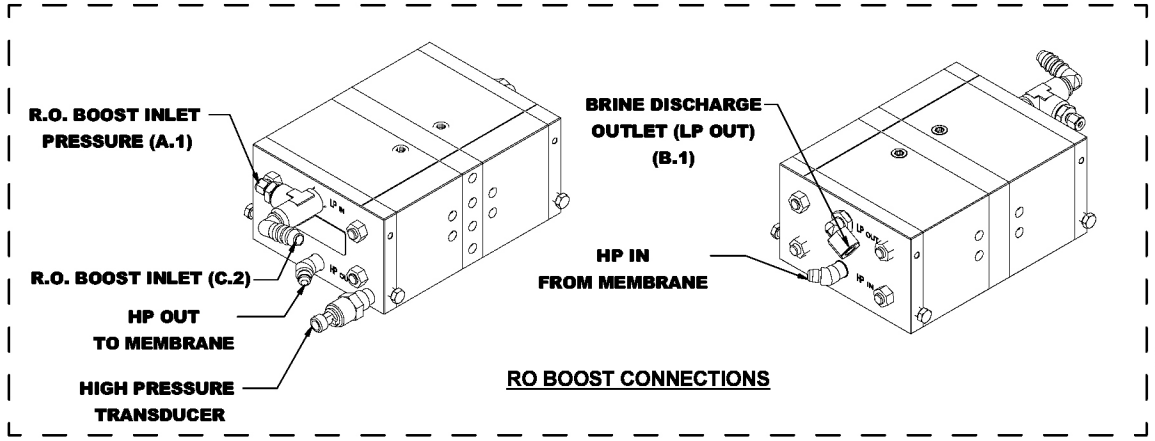

PROPRIETARY STATEMENT
THIS DOCUMENT CONTAINS INFORMATION THAT IS CONFIDENTIAL AND PROPRIETARY TO PARKER WATER PURIFICATION ("PARKER"). THIS DOCUMENT IS FURNISHED ON THE UNDERSTANDING THAT THE DOCUMENT AND THE INFORMATION IT CONTAINS WILL NOT BE COPIED OR DISCLOSED TO OTHERS OR USED FOR ANY PURPOSE OTHER THAN CONDUCTING BUSINESS WITH PARKER, AND WILL BE RETURNED AND ALL FURTHER USE DISCONTINUED UPON REQUEST BY PARKER. THE RECIPIENT OF THIS DOCUMENT THROUGH ITS OWN ANALYSIS AND TESTING IS SOLELY RESPONSIBLE FOR MAKING THE FINAL SELECTION OF THE APPLICABLE SYSTEM AND COMPONENTS AND ASSURING THAT ALL PERFORMANCE, ENDURANCE, MAINTENANCE, SAFETY AND WARNING REQUIREMENTS OF THE APPLICATION ARE MET. COPYRIGHT PARKER. YEAR OF COPYRIGHT IS FIRST YEAR INDICATED ON THIS DOCUMENT. ALL RIGHTS RESERVED.

DIMENSIONAL TOLERANCES - UNLESS OTHERWISE SPECIFIED			
MACHINED			WELDMENT
FRACTIONS	±1/16		TOLERANCE
.X	± .1"	±1.5mm	± .06
.XX	± .01"	±2.5mm	± .06
.XXX	± .005	±0.51mm	± .12
ANGLE	±1 DEG.	±0.127mm	
ANGULAR ± 0' 30'			
125 UNLESS OTHERWISE SPECIFIED			

CUSTOMER -
PROJECT -
DRAWN - AZ DATE - 7/11/2014
CHECKED - PK DATE - 7/11/2014
APPROVED -RI DATE - 7/11/2014
DRY WEIGHT: N/A WET WEIGHT:
CONTRACT NO

Parker Sea Recovery
Parker Hannifin Corporation
Filtration Group / Water Purification
2630 E. El Presidio Street
Carson, CA 90810
Contact
Office: 310-608-5600
Fax: 310-608-5892
www.parker.com

PUMP, RO-BOOST, ASSY, UWIII

SIZE	DWG NO	REV
D	0561009	-

SCALE
1 OF 2

DWG NO 6001950

DUAL MEMBRANE

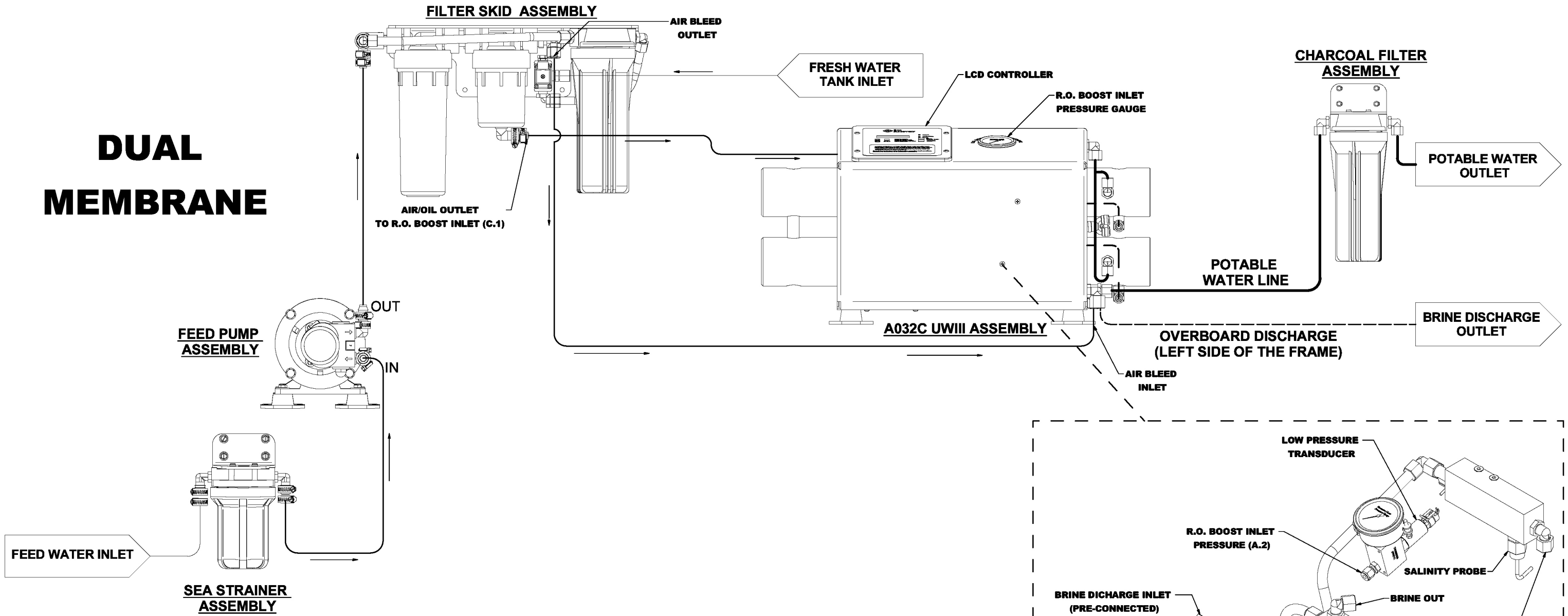

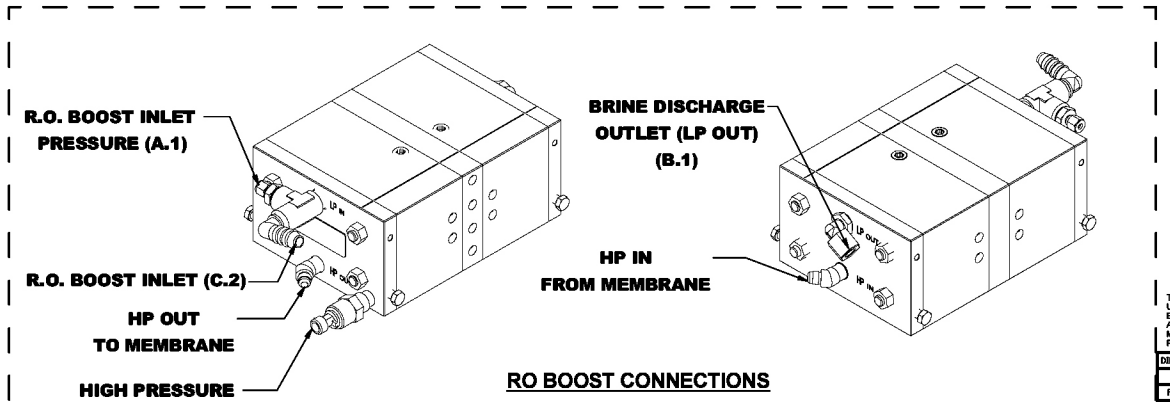

NOTES:
1. PRESSURE CONNECTION INDICATES BY:
   A - R.O. BOOST INLET PRESSURE
   B - BRINE DISCHARGE
   C - AIR/OIL - R.O. BOOST

LINE SYMBOLS

LINE CONNECTIONS BEFORE THE R.O. BOOST PUMP ASSEMBLY

BRINE LINE CONNECTIONS

POTABLE WATER LINE CONNECTIONS

PRORIETARY STATEMENT
THIS DOCUMENT CONTAINS INFORMATION THAT IS CONFIDENTIAL AND PROPRIETARY TO PARKER WATER PURIFICATION ("PARKER"). THIS DOCUMENT IS FURNISHED ON THE UNDERSTANDING THAT THE DOCUMENT AND THE INFORMATION IT CONTAINS WILL NOT BE COPIED OR DISCLOSED TO OTHERS OR USED FOR ANY PURPOSE OTHER THAN CONDUCTING BUSINESS WITH PARKER, AND WILL BE RETURNED AND ALL FURTHER USE DISCONTINUED UPON REQUEST BY PARKER. THE RECIPIENT OF THIS DOCUMENT THROUGH ITS OWN ANALYSIS AND TESTING IS SOLELY RESPONSIBLE FOR MAKING THE FINAL SELECTION OF THE APPLICABLE SYSTEM AND COMPONENTS AND ASSURING THAT ALL PERFORMANCE, ENDURANCE, MAINTENANCE, SAFETY AND WARNING REQUIREMENTS OF THE APPLICATION ARE MET. COPYRIGHT PARKER. YEAR OF COPYRIGHT IS FIRST YEAR INDICATED ON THIS DOCUMENT. ALL RIGHTS RESERVED.

DIMENSIONAL TOLERANCES - UNLESS OTHERWISE SPECIFIED				CUSTOMER -
MACHINED			WELDMENT	
FRACTIONS	±1/16		TOLERANCE	PROJECT -
.X	± .1*	±1.5mm	± .06	
.XX	± .01*	±2.5mm	± .06	
.XXX	± .005	±0.51mm	± .12	DRAWN - AZ DATE - 7/11/2014
ANGLE	±1 DEG.	±0.127mm		CHECKED - PK DATE - 7/11/2014
ANGULAR ± 0' 30'				APPROVED -RI DATE - 7/11/2014
125 UNLESS OTHERWISE SPECIFIED				DRY WEIGHT: N/A WET WEIGHT:
				CONTRACT NO

Parker Sea Recovery
Parker Hannifin Corporation
Filtration Group / Water Purification
3630 E. El Presidio Street
Carson, CA 90810
Contact
Office: 310-608-5600
Fax: 310-635-5992
www.parker.com

PUMP, RO-BOOST, ASSY, UWIII

SIZE	DWG NO	REV
D	0561009	-

SCALE

2 OF 2

DWG NO 0561009

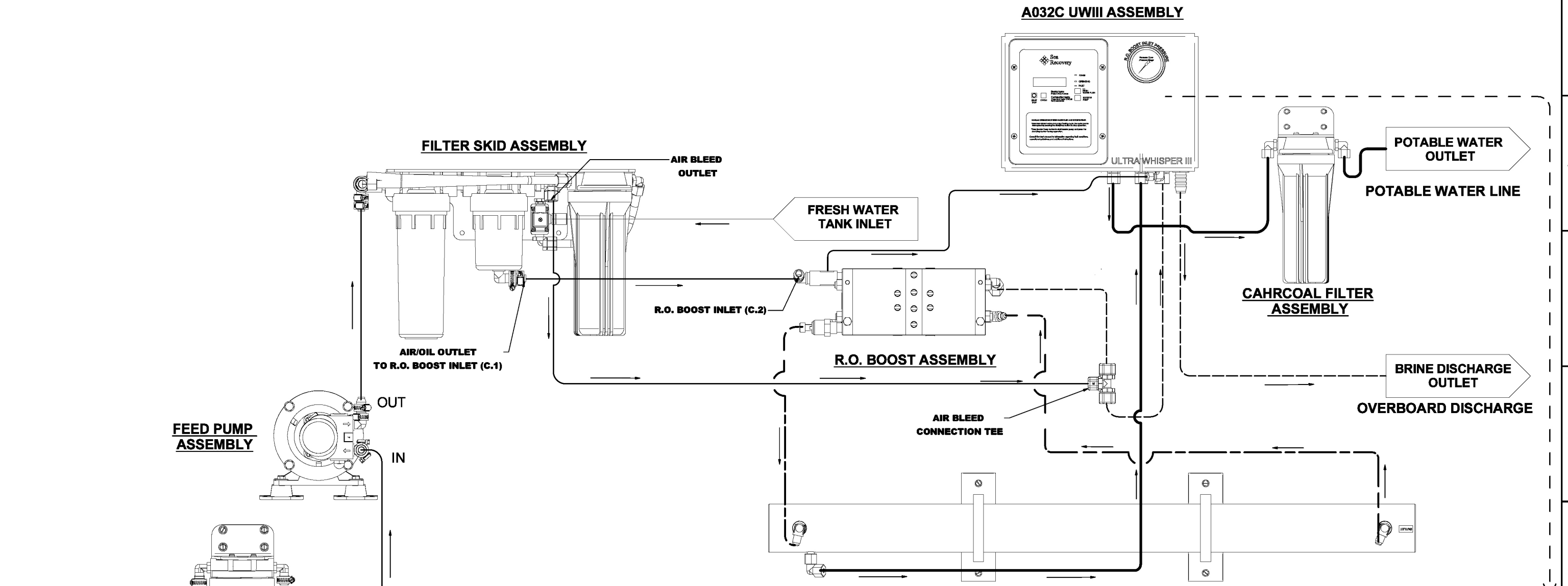

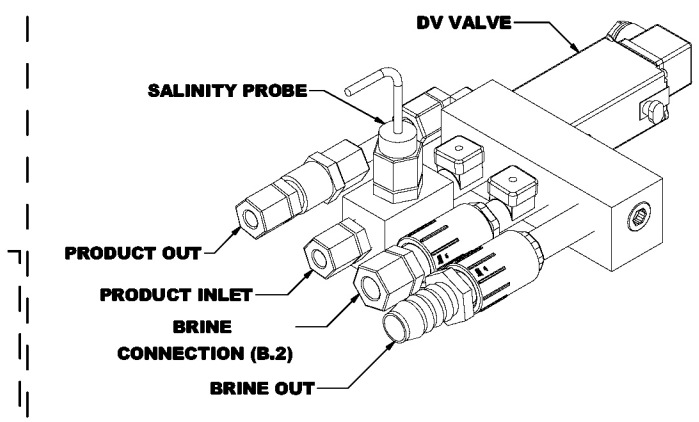

PRODUCT / BRINE MANIFOLD ASSY

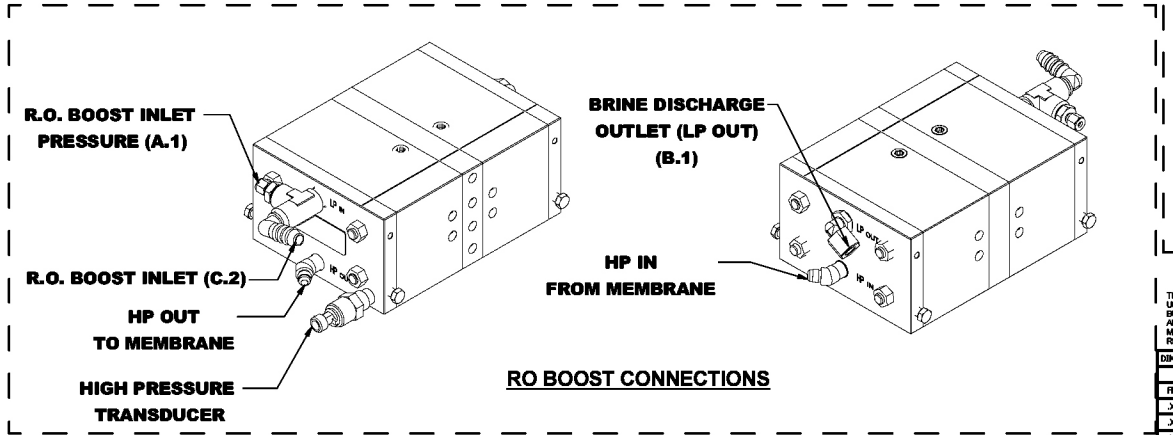

RO BOOST CONNECTIONS

NOTES:
1. PRESSURE CONNECTION INDICATES BY:
   A - R.O. BOOST INLET PRESSURE
   B - BRINE DISCHARGE
   C - AIR/OIL - R.O. BOOST

LINE SYMBOLS

LINE CONNECTIONS BEFORE THE R.O. BOOST PUMP ASSEMBLY	———
BRINE LINE CONNECTIONS	- - - -
POTABLE WATER LINE CONNECTIONS	———

PROPRIETARY STATEMENT
THIS DOCUMENT CONTAINS INFORMATION THAT IS CONFIDENTIAL AND PROPRIETARY TO PARKER WATER PURIFICATION ("PARKER"). THIS DOCUMENT IS FURNISHED ON THE UNDERSTANDING THAT THE DOCUMENT AND THE INFORMATION IT CONTAINS WILL NOT BE COPIED OR DISCLOSED TO OTHERS OR USED FOR ANY PURPOSE OTHER THAN CONDUCTING BUSINESS WITH PARKER, AND WILL BE RETURNED AND ALL FURTHER USE DISCONTINUED UPON REQUEST BY PARKER. THE RECIPIENT OF THIS DOCUMENT THROUGH ITS OWN ANALYSIS AND TESTING IS SOLELY RESPONSIBLE FOR MAKING THE FINAL SELECTION OF THE APPLICABLE SYSTEM AND COMPONENTS AND ASSURING THAT ALL PERFORMANCE, ENDURANCE, MAINTENANCE, SAFETY AND WARNING REQUIREMENTS OF THE APPLICATION ARE MET. COPYRIGHT PARKER, YEAR OF COPYRIGHT IS FIRST YEAR INDICATED ON THIS DOCUMENT. ALL RIGHTS RESERVED.

DIMENSIONAL TOLERANCES - UNLESS OTHERWISE SPECIFIED			
MACHINED			WELDMENT
FRACTIONS	±1/16		TOLERANCE
.X	± .1*	±1.5mm	± .06
.XX	± .01*	±2.5mm	± .06
.XXX	± .005	±0.51mm	± .12
ANGLE	±1 DEG.	±0.127mm	
ANGULAR ± 0° 30'			
125 UNLESS OTHERWISE SPECIFIED			

CUSTOMER -
PROJECT -
DRAWN - AZ DATE - 7/11/2014
CHECKED - PK DATE - 7/11/2014
APPROVED - RI DATE - 7/11/2014
DRY WEIGHT: N/A WET WEIGHT:
CONTRACT NO

Parker Sea Recovery
Parker Hannifin Corporation
Filtration Group / Water Purification
2630 E. El Presidio Street
Carson, CA 90810
Contact
Office: 310-608-5600
Fax: 310-608-5822
www.parker.com

PUMP, RO-BOOST, ASSY, UWIII

SIZE D | DWG NO 0561009 | REV -
SCALE | 1 OF 1

DWG NO 6001950

Chapter 7

Commissioning a New System

New System Start-up Procedures

1. Ensure that the installation has been properly performed.
2. Ensure that the tube-shipping plug has been removed from the potable water outlet port of the Water Control Manifold (Compact System) or from the RO Membrane/Vessel Product Water Port (Modular System) and that all 1/4-inch and 3/8-inch product water tubes are connected.
3. Check the RO Membrane Element as described below.

Note: Some systems are shipped WITHOUT the RO Membrane Element. This is to accommodate, for example, boat builders who install the system well in advance of commissioning the boat and the Sea Recovery System.

If the RO Membrane Element has been installed, there will be an Element Serial Number tag attached to the RO Membrane/Vessel Assembly. Find this serial number tag to ensure that the RO Membrane Element has been installed.

If the RO Membrane Element Serial Number tag is missing or does not contain a serial number and date, then immediately contact the company that sold the system to you or Sea Recovery. Provide Sea Recovery with the system serial number and model number of this Ultra Whisper System.

Caution: DO NOT attempt to operate the system without a RO Membrane Element installed in the system, as extensive damage will result.

4. Ensure that the manual bypass lever located on the side of the 3-Way Product Water Solenoid Diversion Valve is positioned outward (away from the coil body).
5. Check each hose and tube connection to the system to ensure that the installer has properly connected and routed each hose and tube. Ensure that there are no kinks or blockages in any of the hoses or tubes leading to and from the Ultra Whisper System. Improper routing and any blockage in any line causes damage to the system. *Do not rely on the installer's word; check it yourself.*
6. Make sure that the electrical power source, the boat's circuit breaker, to the system is switched "OFF."
7. Open the front panel of the Main Power Enclosure. Check all electrical and electronic connections for proper wiring and attachment.
8. Ensure that the installer has used the proper-sized power wire and Feed Pump wire.
9. Close the Main Power Enclosure front panel.
10. Open the Sea Cock Valve.
11. Open any auxiliary valve within the incoming feed line, Outgoing Brine Discharge Line and Outgoing Product Water Line.

Caution: Any auxiliary valve in the Feed, Product, and Brine lines damages the Sea Recovery System if left closed during starting and/or operation of the system.

12. If the optional Clean Rinse Valves are installed, ensure that they are positioned properly for normal operation.
13. Switch the electrical power source to the "ON" position, the boat's circuit breaker.

14. Perform a Feed pump motor rotational check. Ask an assistant to view the fan chapter of the Feed Water Pump Motor while “jogging” this electric motor.

    Press the “START/STOP” button; then immediately after the booster pump starts, press the “START/STOP” button. Ensure that the Feed Water Pump Electric Motor is turning in the proper rotation.

    To change rotation in DC systems, reverse polarity to the electric motor by interchanging the positive and negative power leads to the motor. Then check the rotation again to ensure proper rotation.

    Caution: The Feed pump is a very close tolerance vane pump. It requires water for lubrication. Operating this pump dry will damage it within 30 seconds. Prime the system with water up to the Feed pump inlet to ensure that it is wet prior to starting.

15. To start the system, press, the “START/STOP” button. If the system automatically shuts off immediately or after 20 seconds of operation, this may be due to a system fault. Look at the Controller to confirm whether a fault has occurred. If Error ID 2 or 3 (High /Low Pressure Error) appears on the screen, ensure that the system feed line is primed and that there is no air in the feed water line. Then, restart the system. Initial new system commissioning may require priming of the feed water up to the Feed Pump inlet and through the pre-filtration in order to build sufficient feed water pressure to maintain operation. Refer to the Troubleshooting Section of this manual.
16. If there are no unforeseen abnormalities, the Ultra Whisper System pressure will automatically increase to normal operating range immediately after starting. The R.O. BOOST will increase pressure to a point at which the system produces the specified amount of product water. The next section (Production, Operating Pressure and Operating Power Consumption) lists approximate expected pressures that a new system should develop when operating in typical sea water of 35,000 PPM TDS at 77 F / 25 C. If any abnormality develops, stop the system and correct the problem.
17. Although the system is producing “product water,” the “product water” may not be “potable” for up to 30 minutes. New RO Membrane Elements require operating time to flush storage chemical from the product water channel. Daily operation requires operating time to flush dissolved solids from the product water channel. The operating time required to flush the product water channel is normal for reverse osmosis systems. The salinity of the product water diminishes gradually and is measured by the salinity probe. When the salinity of the product water has diminished to the factory setting, the salinity controller will energize the 3-Way Product Water Diversion Valve. At that instant, product water will be routed to the charcoal filter, pH neutralizer and UV sterilizer onward to the potable water storage tank.
18. Check for the following:
    a) A constant feed water flow.
    b) A consistent system pressure.
    c) Leaks in the system.
    d) Unusual noises or other occurrences.
19. Complete the “**NEW SYSTEM INITIAL READINGS**” form at the end of this chapter.
20. Prior to stopping the system, determine if the system will be stored for a period of time or if it will be turned over to the owner and operated regularly. Failure to properly flush and/or store the system will lead to premature fouling or drying out of the RO Membrane Element, which is not covered by the Sea Recovery Warranty and is the liability of the person commissioning the system.
    a) If the system will be operated within the next two weeks, no action is necessary. However, if the system will be exposed to freezing temperatures, you must perform winterizing procedures. Freezing temperatures will cause extensive damage if the system is not properly protected.
    b) If the system will not be operated within the next two weeks, perform a freshwater flush. If the Sea Recovery Automatic Freshwater Flush is installed, ensure that the potable water storage tank has potable water for the freshwater flush to utilize in rinsing the system. If the system does not include an automatic freshwater flush, then perform a manual freshwater flush.
    c) If the system will not be operated within the next two months or longer, perform a long-term storage operation.

    Caution: Do not use storage chemicals in the R.O. Boost. Doing so in a short term and/or long term storage will damage the internal of the R.O. Boost. Please follow the storage closed loop configuration for storing your system.

21. Stop the system by pressing the “START/STOP” button once. If the freshwater flush assembly is installed, the freshwater flush lamp will illuminate, intermittently blinking for 2 minutes. This time delay is to allow the R.O. BOOST to dissipate its pressure. After the 2-minute wait period, the freshwater flush automatic cycle will begin, as indicated by a steady, non-blinking illumination of the freshwater flush lamp.

The freshwater flush cycle will last for approximately 10 minutes. The 10-minute cycle is adjustable from 6 to 10 minutes. After the freshwater flush cycle is complete, the freshwater flush lamp will illuminate and intermittently blink in the stand-by mode. Every 7 days, the freshwater flush rinse cycle will repeat automatically.

If the “START/STOP” button is pressed twice, the automatic freshwater flush cycle will be cancelled, and the freshwater flush lamp will not be illuminated.

22. Close the Inlet Sea Cock Valve. This is a safeguard for vessel installations.
23. If the freshwater flush is installed and activated, do not interrupt power. If the freshwater flush is not installed or is not activated, turn off the electrical power source (circuit breaker) to the system. This eliminates the chance of inadvertently starting the system. If the power source has been turned off, the freshwater flush will not cycle every 7 days.

Pressure Changes

The system operating pressure (the pressure applied to the RO Membrane Element) varies with the feed water temperature, the feed water salinity and the condition of the RO Membrane Element. The system design specifications are based on feed water temperature of 77° F / 25° C and a feed water salinity of 35,000 PPM-TDS (parts per million-total dissolved solids). Each RO Membrane Element can vary +/- 15%, which will cause the final operating pressure to decrease or increase accordingly. However, assuming the "perfect RO Membrane," at this temperature and salinity the system will operate at the standard system pressure listed within the specifications at the beginning of this Owner's Manual.

If the feed water salinity increases or if the feed water temperature decreases, the system operating pressure will increase. Inversely, if the feed water salinity decreases or if the feed water temperature increases, the system operating pressure will decrease. Furthermore, if the RO Membrane Element is new or old and fouled, the system operating pressure automatically decreases or increases accordingly to overcome the RO Membrane Element condition.

Operating amperage and operating pressure will increase if:

1. The feed water temperature is lower than 77º F / 25º C.;
2. The feed water salinity is greater than 35,000 PPM TDS (3.5% Total Dissolved Solids);
3. The RO Membrane Element becomes fouled;
4. The RO Membrane Element is new and on the minus 15% side of the specifications.

Operating amperage and operating pressure will decrease if:

1. The feed water temperature is higher than 77º F/ 25º C.;
2. The feed water salinity is less than 35,000 PPM TDS (3.5% Total Dissolved Solids);
3. The RO Membrane Element is new and on the plus 15% side of the specifications.

By monitoring feed water salinity, temperature and resulting system operating pressure, it is possible to measure and monitor the fouling of the RO Membrane Element over time and use. As the feed water vane pump becomes worn from normal use, it will lose flow and the ability to build up pressure. A reduction in product water production could be caused by insufficient pressure and/or flow from the R.O Boost pump. If the R.O Boost pump becomes worn resulting in reduced pressure and/or flow, it may be returned to Sea Recovery for rebuild or replacement. Because of the specific matching requirements of the wear parts and tight tolerance, it is not practical to repair in the field. Please refer to maintenance table.

Sea Recovery Ultra Whisper NEW SYSTEM INITIAL READINGS

At the time of commissioning the NEW system, record the following information after one hour of continuous proper operation of the system. Retain this form in the Owner's Manual for future reference and troubleshooting. This information is valuable to the servicing technicians in providing technical support to the owner and future operators of the Ultra Whisper System. Provide this information to service technicians when requesting technical assistance.

Serial Number: _____

Check Model Number:

Ultra Whisper Compact _____ 400; or _____ 600

Ultra Whisper Modular _____ 400; or _____ 600

Name of Operator: _____

Date: _____

Installer Information:

Company _____

Street Address _____

City, State _____

Country, Postal Code _____

Telephone Number _____

Name of Installer _____

System Power: _____Volts AC, _____ Hz or _____Volts DC

Feed Water Temperature: _____Fahrenheit or _____ Celsius

Hour Meter Reading: _____ Hours

PRESSURE GAUGE READINGS:

R.O. BOOST Inlet Pressure Gauge Reading: ____ PSI, ____ Bar, ____KPa, or

____Kg/Cm2 RO

Membrane/Vessel Assy Outlet Pressure Gauge Reading:

____ PSI, ____ Bar, _____KPa, or ____ Kg/Cm

TIME OF PRESSURE RELEASE

Time of pressure release after shutdown out of the entire system ____m____s (Over 2 minutes check system connections)

WATER FLOW METER READINGS:

Product Water Flow Meter: _____ US Gallons Per Hour, or _____ Liters Per Hour

Brine Water Flow Meter: _____ US Gallons Per Hour, or _____ Liters Per Hour

WATER QUALITY:

Feed Water Salinity: _____ ppm or Location of Use:

Product Water Salinity: _____ ppm

Unusual Occurrences or Noises:

_____

_____

Chapter 8

System Daily Operation

Day-to-Day Start-up Procedures for the Ultra Whisper System

1. Open any auxiliary valve within the incoming feed line, Outgoing Brine Discharge Line and Outgoing Product Water Line.

   Danger: Any auxiliary valve in these lines damages the Sea Recovery System if left closed during starting and/or operation of the system.

   Caution: In temperatures below 32° F/ 0° C, the freshwater will freeze and damage the components filled with freshwater. Do not operate the system in below-freezing feed water temperatures.

2. If the optional Clean Rinse Valves are installed, ensure that they are positioned properly for normal operation. Refer to the Piping and Interconnect Diagram at the beginning of this Chapter.
3. Open the Sea Cock Valve.
4. Switch the electrical power source to the “ON” position, boat’s circuit breaker.

   Danger: The Feed pump is a very close tolerance vane pump. It requires water for lubrication. Operating this pump dry will damage it within 30 seconds. If feed water has drained from the pump, prime the system with water up to the Feed pump inlet to ensure that it is wet prior to starting.

5. To start the system, press the “START/STOP” button. If the system automatically shuts off immediately or after 20 seconds of operation, this may be due to a system fault. Look at the touch pad to confirm whether a fault has occurred.
6. If there are no unforeseen abnormalities, the Ultra Whisper System pressure will automatically increase to normal operating range immediately after starting. Refer to temperature and salinity charts in the final chapter of this manual.
7. If any abnormality develops, stop the system and correct the problem.
8. Although the system is producing “product water,” the “product water” may not be “potable” for up to 30 minutes. The Operating light will blink, when product water is unpotable and becomes solid “green”, when the product water is potable. The salinity of the product water diminishes gradually and is measured by the salinity probe. When the salinity of the product water has diminished to the factory setting, the salinity controller will energize the operating light becomes solid “green” and the 3-Way Product Water Diversion Valve opens to product. At that instant, product water will be routed to the charcoal filter, pH neutralizer, UV sterilizer and onward to the potable water storage tank (depending on your options).
9. Check for the following:
   a) A constant feed water flow.
   b) A consistent system pressure.
   c) Leaks in the system.
   d) Unusual noises or other occurrences.

Controller Operations

Start/Stop button

1. Powers on and sets the system in its initial state.
2. When the system is producing water and the START/STOP button is pushed, the system stops all pumps and diverts water into the sea.
3. Resets all faults.

Note that this button performs its designated action, regardless of whether or not you are browsing a menu.

Cycle button

This button allows the operator to cycle through the process and configuration parameters.

- Press the CYCLE button once to view to view the Display Menu.
- Press and hold CYCLE for 5 seconds to view the Configuration Menu.

Display Menu

This menu monitors measured values (e.g. pressure, flow and salinity); system states (e.g. FWF, running, FWP); and timers. Press the CYCLE button once to view this menu and CYCLE again to scroll through the menu items. Every time CYCLE is pressed, the next item is shown. If you release, and do not push the CYCLE button for more than 5 seconds, you will return to the main screen.

1. Pre-Filter Press – Inlet pressure in Bar or PSI (pre-filter inlet)
2. HP Inlet Press – Inlet pressure in Bar or PSI (high pressure pump inlet)
3. Membrane Press – Membrane pressure in Bar or PSI

4. Product Flow – Product water flow in l/min or GPM
5. Brine Flow – Brine flow in l/min or GPM
6. Water Quality – Salinity (water status) in ppm
7. Total Hours – High pressure pump/R.O. BOOST hour meter (counted in seconds but shown in whole hours)
8. Tank Full–Yes or no
9. Tank Empty–Yes or no
10. Booster Relay - Booster pump on or off
11. FWF Relay – Fresh Water Flush on or off
12. HP Relay – High pressure pump on or off
13. DV Relay – Diversion valve on or off
14. UV Relay – Ultraviolet on or off
15. Supply Voltage – volts (used only for diagnostics)
16. Version – software version

Configuration (Change) Menu

This menu shows a list of configuration parameters that can be changed by the operator. Press the CYCLE button and hold for 5 seconds to view this menu and CYCLE again to scroll through the menu items. Every time CYCLE is pressed, the next item is shown. Holding the CYCLE button for more than 5 seconds selects the displayed menu item. Note that this menu does not allow the operator to monitor the state of these configuration parameters. Please use the Configuration (Read) Menu to do so.

1. Unit – units (metric or US)
2. Low Pressure 1 Inst – S1 Lo pressure sensor installed (yes or no)
3. Low Press 2 Inst – S2 Lo pressure sensor installed (yes or no)
4. Prod Flow Inst – Product flow meter installed (yes or no)
5. Brine Flow Inst – Brine flow meter installed (yes or no)
6. Tank Full Inst – Tank level full sensor installed (yes or no)
7. Tank Empty Inst – Tank level empty sensor installed (yes or no)
8. FWF Delay – High pressure pump stop to FWF delay (HH:mm: ss)
9. Time to AutoShut – Auto shutdown after X hours in state FWP (HH:mm:ss)
10. AutoShut Time – Auto shutdown after time (yes or no)
11. AutoShut Tank – Auto shutdown on tank full (yes or no)
12. FWF Duration – FWF duration time (HH:mm:ss)
13. FWF Interval – FWF interval time (HH:mm:ss)
14. PassiveUVoff – Time from leaving fresh water production to turning UV off (HH:mm:ss)
15. UV off delay – Time from UV on to diversion valve to tank (HH:mm:ss)
16. AutoStart Tank – Autostart on tank empty (yes or no)
17. BP Delay – Time from feed pump to high pressure pump/R.O. BOOST (HH:mm:ss)
18. Salinity Level – Salinity error level (ppm)
19. Min Pressure – minimum pressure (Bar or PSI)
20. Min Pressure Time – Min pressure measure time (HH:mm:ss)
21. Max Pressure – Maximum pressure (Bar or PSI)
22. Sol. Valve Time – Solenoid valve time (seconds)

Configuration (Read) Menu

This menu monitors a selected list of configuration parameters, which may be of interest to the operator (e.g. units are metric or US, FWF time interval, etc.). This menu is appended to the Display Menu.

1. Unit – units (metric or US)
2. Low Pressure 1 Inst – S1 Lo pressure sensor installed (yes or no)

3. Low Press 2 Inst – S2 Lo pressure sensor installed (yes or no)
4. Prod Flow Inst – Product flow meter installed (yes or no)
5. Brine Flow Inst – Brine flow meter installed (yes or no)
6. Tank Full Inst – Tank level full sensor installed (yes or no)

7. Tank Empty Inst – Tank level empty sensor installed (yes or no)
8. Time to AutoShut – Auto shutdown after X hours in state FWP (HH:mm:ss)
9. AutoShut Time – Auto shutdown after time (yes or no)
10. AutoShut Tank – Auto shutdown on tank full (yes or no)
11. FWF Duration – FWF duration time (HH:mm:ss)
12. FWF Interval – FWF interval time (HH:mm:ss)
13. AutoStart Tank – Autostart on tank empty (yes or no)
14. Salinity Level – Salinity error level (ppm)
15. Min Pressure – minimum pressure (Bar or PSI)
16. Max Pressure – Maximum pressure (Bar or PSI)
17. Sol. Valve Time – Solenoid valve time (seconds)

Fresh Water Flush button

This button initiates the Fresh Water Flush (FWF) cycle. The cycle can be interrupted by pressing this button again to stop operation. Note that this button starts the FWF cycle, regardless of whether or not you are browsing a menu. Note the button has to be pressed down for 5 seconds and released to initiate FWF.

Booster Pump button

Start the booster pump. Press the Start/Stop button to stop operation. Note that this button starts the booster pump, regardless of whether or not you are browsing a menu.

Shutting Down the Ultra Whisper System

1. Prior to stopping the system, determine if the system will be stored for a period of time or if it will be operated again soon. Failure to properly flush and or store the system will lead to premature fouling or drying out of the RO Membrane Element, which is not covered by the Sea Recovery Warranty and is the liability of the operator of the system. If the system will not be operated within the next month or longer, perform a long-term storage operation.
   a) If the system will be exposed to freezing temperatures, you must follow winterizing procedures. Freezing temperatures will cause extensive damage if the system is not properly protected.
   b) If the system will be operated within the next two weeks, no action is necessary besides winterization for freezing temperatures.
   c) If the system will not be operated within the next two weeks, perform a freshwater flush. If the Sea Recovery Automatic Freshwater Flush is installed, ensure that the potable water storage tank has fresh potable water for the freshwater flush to utilize in rinsing the system. If the system does not include an automatic freshwater flush, perform a manual freshwater flush of the system.
   d) If the system will not be operated within the next month or longer, perform a long-term storage operation.

2. Stop the system by pressing the “START/STOP” button once. As soon as the system shuts down, there will be a pressure release out of the system and all pressures will drop to zero after 2 minutes.

Danger: Any auxiliary valve in these lines damages the Sea Recovery System if closed during depressurization or during fresh water flush cycle.

Caution: If pressure remains in the system of 30 psi (2 Bar) or greater in the system refer to your trouble shooting guide or contact your Sea Recovery dealer.

If the freshwater flush assembly is installed, the freshwater flush will start 2 minutes after shut down. When the freshwater flush starts there will be a click and a green light will illuminate on the LCD screen. The time delay after shut down is to allow the R.O. Boost depressurize.

The freshwater flush is equipped with a solenoid valve, that clicks open allowing the boats freshwater supply to flush the system. The freshwater flush cycle will last for approximately 10 minutes. The 10-minute cycle is adjustable on LCD controller. After the freshwater flush cycle is complete, the LCD screen will say stand-by. Every 7 days the freshwater flush rinse cycle will repeat automatically.

If the “START/STOP” button is pressed twice, the automatic freshwater flush cycle will be cancelled, and the freshwater flush lamp will not be illuminated. To manually start the freshwater flush system, hold down the freshwater flush button for 10 seconds and release, there will be a click and will run a full cycle.

3. Close the Inlet Sea Cock Valve. This is a safeguard for vessel installations.
4. If the freshwater flush is installed and activated, do not interrupt power. If the freshwater flush is not installed or is not activated, turn off the electrical power source (circuit breaker) to the system. This eliminates the chance of inadvertently starting the system. If the power source has been turned off, the freshwater flush will not cycle every 7 days.

Maintenance Schedule

Maintenance Timetable:

COMPONENT	MAINTENANCE	TIME INTERVAL	REPLACE INTERVAL
Sea Strainer	Inspect & Clean Screen & Housing	weekly	100 hours
Plankton Filter	Inspect & clean	weekly	100 hours
Pre-filter	Replace element(s)	Low Pressure <10 psi (0.68 BAR)	Low Pressure <10 psi (0.68 BAR)
Air/Oil Separator Orifice	Inspect & clean	3-6 months	500 hours
Feed Pump	Inspect	3-6 months	700-1000 hours
R.O. Boost	Inspect	3-6 months	Rebuild 400-500 hours
R. O. Membrane	Clean Element	When production or salt rejection decreases by 10%	
Salinity Probe	Clean Probes	Annually	
Transducer	Inspect	Annually	
Charcoal Filter	Replace Element	3 months	3 months
pH Neutralizing Cartridge	Replace Cartridge	when calcium carbonate granules are depleted	
UV Sterilizer	Replace lamp & clean quartz sleeve	2000 Hours	2000 Hours
Fresh Water Flush Charcoal Element	Replace Element	3 months	3 months

Chapter 9

System Storage and Cleaning

Membrane Element Handling and System Storage Warnings

Freezing Temperatures

Caution: The System must be protected from freezing if it will be exposed to temperatures below 32°F (0°C). Freezing temperatures will cause extensive damage to the System as the water expands during the freezing process. Resulting damage to the System caused by freezing temperatures is the liability of the Operator.

Caution: DO NOT subject the System to temperatures below 32°F (0°C), unless the System has been rinsed with a solution of Product Water with 20% food-grade Glycerin (Propylene-Glycol).

RO Membrane Element Handling

Caution: Never store the RO Membrane Element or Membrane/Vessel Assembly in direct sunlight. Never expose the RO Membrane Element or Membrane/Vessel Assembly to storage temperatures above 120ºF (50ºC) or below 32ºF (0ºC). High temperatures may cause irreversible damage and up to 40% production loss in the RO Membrane Element. Freezing temperatures cause mechanical System damage, as well as irreversible damage to the RO Membrane Element.

Caution: The RO Membrane Element must remain wet at all times. Never allow the RO Membrane Element to dry out, as drying out may cause up to 40% production loss, as well as irreversible damage. Some, but not all, production may be restored by saturating the RO Membrane Element in Product Water for several days, and then operating the System by feeding Product Water into the System for a continuous 48-hour period.

Caution: Never expose the RO Membrane Element to chemicals other than those supplied by Sea Recovery Corporation. Use caution when operating the system in harbors that may be polluted with chemicals, oil or fuel, as these chemicals may damage the RO Membrane Element beyond repair.

Caution: Protect the RO Membrane Element from biological fouling, as it may cause significant production loss. Some, but not all, production may be restored after cleaning. The System must be protected from biological fouling if it will not be operated over a period of two (2) weeks or more.

Important: Third-party chemicals will destroy the RO Membrane Element! Only use Sea Recovery Corporation-supplied chemicals. Never use third-party chemicals, as they are incompatible with various System materials and will dissolve the co-polymer parts. Damage to the System or its components as a result of using third-party chemicals is not covered by the Sea Recovery Corporation Warranty.

Fresh Water Flush

There must be sufficient Fresh Water in the Potable Water Storage Tank. In order to provide the required water flow to the System during the Fresh Water Flush cycle, the ship's fresh-water pressure system must deliver a

minimum of 1 U.S. Gallons (3.8 Liters) per minute at minimum 30 PSI and maximum 75 PSI (minimum 2 Bar and maximum 5 Bar).

- If the Minimum of 1 U.S. Gallons (3.8 Liters) per minute at minimum 30 PSI (minimum 2 Bar) is not achieved, then the System may not fully flush the System with enough fresh water to displace the Feed Water (i.e., sea water).
- If the Maximum 75 PSI (maximum 517 kPa) is exceeded, then the System will shut down and revert to a fault mode due to excess pressure. In this event, the Owner or Installer must install a Pressure Reduction Valve from the ship's Pressurized Fresh Water Line prior to the inlet of the System Fresh Water Flush Charcoal Filter Inlet.

Automated Fresh Water Flush

If the Automated Freshwater Flush (FWF) Accessory is installed, after a 2-minute delay, the Ultra Whisper is flushed with freshwater automatically each time the system is stopped after operation. The Ultra Whisper may also be flushed with freshwater simply by pressing the FWF for 5 seconds LCD controller. Refer to the two diagrams in this chapter, which illustrate the water flow when the Ultra Whisper is performing an Automated Freshwater Flush, if the included Freshwater Flush Accessory is installed.

Manual Fresh Water Flush

If the Automated Freshwater Flush Accessory is not installed, or if a manual freshwater flush is preferred, when the instructions within this chapter state “configure for once-through rinse” to rinse the system with freshwater for short-term non-use in non-freezing temperatures, proceed as follows.

1. Configure the suction line for a once-through process.
   a) Close the Sea Cock Valve.
   b) If the Optional Rinse/Clean Inlet Valve is not installed, disconnect the hose from the outlet line of the Sea Strainer, and place it in the Rinse/Clean Solution Container or bucket.
   c) If the Optional Rinse/Clean Inlet Valve is installed, position it to draw water from the Rinse/Clean Container.
2. Configure the brine discharge line for a once-through process.
   a) Connect the brine discharge line from the system to the thru-hull overboard discharge fitting. This is the normal connection for normal operation.
   b) If the system is equipped with an Optional Discharge Rinse/Clean Outlet Valve, position this valve to discharge through the Brine Discharge Connector. This is the normal connection for normal operation.

Once-Through Depressurized Rinse

When the instructions within this chapter state “configure for once-through depressurized rinse” used for once-through flushing of storage chemical, winterizing chemical or rinse between RO Membrane cleaning, proceed as follows. Refer to the two diagrams illustrated in this chapter.

1. In order to relieve pressure during the once-through winterizing rinse process, the Pressure Relief Tube Kit must be installed.
   a) Disconnect only one end of the High-Pressure Hose MVA Outlet/R.O. Boost Return either from the RO Membrane/Vessel Assembly Outlet (brine discharge end) or from the R.O. BOOST (whichever is easier to access).
   b) Connect the Product Relief Tube Kit to the loose end of the High-Pressure Hose and to the exposed fitting on the RO Membrane/Vessel Assembly Outlet or the R.O. BOOST fitting (whichever fitting the High-Pressure Hose was disconnected from).
   c) Route the 3-inch O.D. Tube from the Pressure Relief Tube Kit into the Rinse/Clean Solution Container or bucket.

2. Configure the suction line for a once-through process.
   a) Close the Sea Cock Valve.

b) Disconnect the outlet line from the Sea Strainer and place it in the Rinse/Clean Solution Container.
c) If the System is equipped with an Optional Inlet Rinse/Clean Valve between the Sea Strainer and Feed Pump, then position this valve to draw from the Rinse/Clean Solution Container.

3. Configure the brine discharge line for a once-through process.
   a) Connect the brine discharge line from the system to the thru-hull overboard discharge fitting. This is the normal connection for normal operation.
   b) If the System is equipped with an Optional Discharge Rinse/Clean Outlet Valve, position this valve to discharge through the Brine Discharge Connector. This is the normal connection for normal operation.

RO Membrane Element Cleaning Closed Loop

When the instructions within this chapter state “configure for RO Membrane Element Cleaning Closed Loop,” proceed as follows.

1. In order to relieve pressure during the closed loop process, the Product Relief Tube Kit must be installed. Disconnect only one end of the High-Pressure Hose MVA Outlet/R.O. Boost Return either from the RO Membrane/Vessel Assembly Outlet (brine discharge end) or from the R.O. BOOST (whichever is easier to access).
   b) Connect the Product Relief Tube Kit to the loose end of the High-Pressure Hose and to the exposed fitting on the RO Membrane/Vessel Assembly Outlet or the R.O. BOOST (whichever fitting the High-Pressure Hose was disconnected from).
   c) Route the 3-inch O.D. Tube from the Pressure Relief Tube Kit into the Rinse/Clean Solution Container or bucket.
2. Configure the suction line for a closed loop process.
   a) Close the Sea Cock Valve.
   b) Disconnect the outlet line from the Sea Strainer and place it in the Rinse/Clean Solution Container.
   c) If the system is equipped with an Optional Inlet Rinse/Clean Valve between the Sea Strainer and Feed Pump, then position this valve to draw from the Rinse/Clean Solution Container.
3. Configure the brine discharge line for a closed loop process.
   a) Disconnect the brine discharge line from the thru-hull overboard discharge fitting and place it in the Rinse/Clean Solution Container.
   b) If the system is equipped with an Optional Discharge Clean/Rinse 3-way Ball Valve, position this valve to return to the Rinse/Clean Solution Container.

Short-Term Shutdown

A short-term shutdown is defined as a period of time in which the system is not utilized for up to four weeks. An effective short-term protection for the system and RO Membrane Element is a freshwater rinse of the entire system with freshwater (product water from the system). This prolongs the system life by minimizing electrolysis and retarding biological growth.

Important: If the system is equipped with an automatic freshwater flush, then it is not necessary to read this chapter. The Automated Freshwater Flush rinses the system every 7 days automatically. However, see “Winterizing and Freezing” note below.

Important: If the system is exposed to freezing temperatures, perform a manual freshwater rinse as described below, and follow the included winterizing instructions.

Manual Fresh Water Rinse Procedure

Follow the directions below if the system is not equipped with an Automated Freshwater Flush System or if the system will be subjected to freezing temperatures during non-use. This procedure displaces the system feed water with fresh water and allows a short-term shutdown for up to four weeks. Five gallons (19 liters) of fresh product, or potable water, is required for the freshwater rinse. These instructions also explain how to winterize the system. One gallon (3.8 liters) of food-grade propylene glycol will be required to winterize the system.

1. Configure the system for a “**Once-Through Rinse.**”

2. Clean the Sea Strainer Mesh Screen.
3. Clean the Plankton Filter Element.
4. Clean (hose off) or replace 5-micron pre-filter elements with new 5-micron Sea Recovery pre-filtration elements.
5. Fill the Rinse/Clean Solution Container or a 5-gallon container with clean, fresh water.
6. Press the “START/STOP” button. The freshwater rinses the system and discharges out through the thru-hull discharge fitting.
7. Just prior to depleting the rinse water from the Rinse/Clean Solution Container, stop the system by pressing the “START/STOP” button.
8. If the system will NOT be exposed to freezing temperatures, reconfigure the suction line for normal operation. If the system will be exposed to freezing temperatures during non-use, skip this step and go to step 9 below.
   a) Leave the Sea Cock Valve closed.
   b) Reconnect the Sea Strainer outlet line to the outlet of the Sea Strainer, or reposition the Inlet Clean Rinse Valve to the normal operating position.

IN NON-FREEZING TEMPERATURES, THE SYSTEM MAY NOW BE LEFT UNATTENDED FOR SEVERAL WEEKS. A GUIDE WOULD BE 4 WEEKS IN WARM CLIMATES AND 8 WEEKS IN COLD CLIMATES. HOWEVER, IF THE SYSTEM WILL BE EXPOSED TO FREEZING TEMPERATURES, CONTINUE WITH THE FOLLOWING PROCEDURES:

9. If the system will be exposed to freezing temperatures during non-use of the system, configure the system for a “Once-Through Depressurized Rinse” using the Product Relief Tube Kit
10. Again, fill the Rinse/Clean Solution Container or a 5-gallon bucket with 4 gallons (15 liters) of clean, freshwater. Add 20% (1 gallon/3.8 liters) food-grade propylene glycol to the freshwater. This prevents the water in the system from freezing.
11. Press the “START/STOP” button. The winterizing solution rinses the system and discharges out the waste.
12. Just prior to depleting the winterizing solution from the Rinse/Clean Solution Container, stop the system by pressing the “START/STOP” button twice (2 times) in order to stop the system as well as deactivate the freshwater flush cycle. Ensure that the “freshwater flush” lamp is NOT illuminated.
13. Reconfigure the system for normal operation:
    a) Leave the Sea Cock Valve closed.
    b) Reconnect the Sea Strainer outlet line to the outlet of the Sea Strainer or reposition the Inlet Clean Rinse Valve to the normal operating position.
    c) Remove the Product Relief Tube Kit.
    d) Reconnect the High-Pressure Hose.
14. The Sea Strainer and post-filtration chapter have not received winterizing solution in this process. The water must be drained from the respective components.
    a) Remove the Sea Strainer bowl from the Sea Strainer and drain the feed water from it. Replace the Sea Strainer bowl back onto the Sea Strainer.
    b) Remove the charcoal filter bowl from the charcoal filter and drain the product water from it. Replace the charcoal filter bowl back onto the charcoal filter.
    c) Remove the pH neutralizer filter bowl from the pH neutralizer filter and drain the product water from it. Replace the pH neutralizer bowl back onto the pH neutralizer filter.
    d) Disconnect the top and bottom tube fittings from the ultraviolet sterilizer and drain the product water from the UV sterilizer chamber. Reconnect the top and bottom tube fittings back onto the UV sterilizer.
    e) Disconnect the freshwater line from the potable water storage tank to the freshwater flush pump or if a valve is installed in this line close it to isolate the potable water line from the freshwater flush pump.
    f) Remove the Fresh Water Flush Charcoal Filter bowl and drain it. Replace the Fresh Water Flush Charcoal Filter bowl back onto the Fresh Water Flush Charcoal Filter.

IN FREEZING TEMPERATURES, THE SYSTEM MAY NOW BE LEFT UNATTENDED DURING THE FREEZING TEMPERATURE SEASON. AFTER THE SEASON, THE SYSTEM SHOULD BE RINSED WITH STORAGE CHEMICAL IF IT WILL NOT BE OPERATED.

Long-Term Shutdown

A long-term or prolonged shutdown is a period in which the system is not used for longer than 3 to 4 months, depending on conditions. For this interval, the system should first be rinsed with freshwater, then stored with System and Membrane Element Storage Chemical (SRC SC). This chemical inhibits bacterial growth while maintaining the high flux and salt rejection of the RO Membrane Element. The long-term shutdown procedure requires 10 gallons (38 liters) of potable water. Follow the directions listed below.

Important: If the system will be exposed to freezing temperatures during non-use, have ready (1 gallon / 3.8 liters) food-grade glycerin (propylene glycol), and follow instructions to add it to the storage chemical solution. This prevents the water in the system from freezing.

Caution: Do not use storage chemicals in the R.O. Boost. Doing so in a long term storage will damage the internal of the R.O. Boost. Please follow the storage closed loop configuration for storing your system.

1. Configure the system for a “Once-Through Depressurized Rinse” using the Product Relief Tube Kit.
2. Close the Inlet Sea Cock Valve.
3. Clean the Sea Strainer Mesh Screen.
4. Clean the Plankton Filter Element.
5. Replace the pre-filtration cartridges with new 5-micron Sea Recovery pre-filtration elements.
6. Fill the Rinse/Clean Solution Container with non-chlorinated product water.
7. Start the system. The rinse water rinses the entire system and discharge to waste.
8. Just prior to depleting the rinse water from the Rinse/Clean Solution Container, stop the system by pressing the “START/STOP” button twice to stop the system and also to abort the freshwater flush cycle.
9. Once again, fill the Rinse/Clean Solution Container with non-chlorinated product water.
10. If the system will not be exposed to freezing temperatures, then skip to Step 13.
11. Add 1-gallon (3.8 liters) of food grade glycerin (propylene glycol) to the water in the Rinse/Clean Solution Container. This prevents the system from damage in freezing temperatures.
12. Operate the system by pressing the “START/STOP” button. The propylene glycol solution will flow through the system and recirculate. After 5-10 minutes, stop the system by pressing “START/STOP” button.
13. Configure the system for a storage closed loop. (Refer to diagram below)
14. Add ONLY 4 ounces (1/6th of the container) of SRC SC storage chemical to the water or propylene glycol solution in the Rinse/Clean Solution Container.
15. Mix and thoroughly dissolve the solution in the Rinse/Clean Solution Container.
16. Operate the system by pressing the “START/STOP” button. The storage chemical solution flows from the container, through the system, and out the brine discharge thru-hull fitting. After 5-10 minutes, stop the system by pressing “START/STOP” button.
17. Discard any remaining winterizing solution in a safe, environmentally friendly and legal manner.
18. Reconfigure the system for normal operation:
    a) Leave the Sea Cock Valve closed.
    b) Reconnect the Sea Strainer outlet line to the outlet of the Sea Strainer or reposition the Inlet Clean Rinse Valve to the normal operating position.
    c) Remove the Product Relief Tube Kit.
    d) Reconnect the High-Pressure Hose.

16. The Sea Strainer and post-filtration chapter have not received storage and winterizing solution in this process. The water must be drained from the respective components.
    a) Remove the Sea Strainer bowl from the Sea Strainer and drain the feed water from it. Replace the Sea Strainer bowl back onto the Sea Strainer.
    b) Remove the charcoal filter bowl from the charcoal filter, clean the inside of the bowl and replace the element with a new Sea Recovery charcoal filter element.

c) Remove the pH neutralizer filter bowl from the pH neutralizer filter, drain the product water from it and clean the inside of the bowl. Replace the pH neutralizer bowl back onto the pH neutralizer filter.

d) Disconnect the top and bottom tube fittings from the ultraviolet sterilizer and drain the product water from the UV sterilizer chamber. Reconnect the top and bottom tube fittings back onto the UV sterilizer.

e) Disconnect the freshwater line from the potable water storage tank to the freshwater flush pump or, if a valve is installed in this line, close it to isolate the potable water line from the freshwater flush pump.

f) f) Remove the freshwater flush charcoal filter bowl; drain and clean the inside of the bowl. Replace the freshwater flush charcoal filter element with a new Sea Recovery freshwater flush charcoal filter element, and replace the bowl with new element back onto the housing.

The system may now be left unattended for up to 3 to 6 months. With ideal conditions, including a relatively new RO Membrane Element, a clean system prior to storage, cool temperatures and no leakage of storage chemical

within the system, it provides protection for up to 6 months. Adverse conditions may provide less protection. Evaluate these factors before determining the proper interval between repeated rinsing and storage periods.

RO Membrane Element Cleaning Procedures

Important: Do not arbitrarily clean the RO Membrane in a new system. If a new system experiences low production or high salinity, then the system should be operated for up to 48 hours continuously to clear and saturate the RO Membrane Element product water channel. If a new system still experiences low production and or high salinity after 48 hours of continual operation, then contact the factory.

Important: The membrane element requires cleaning from time to time. Biological growth and salt accumulation eventually make replacement necessary. The frequency of required cleaning depends on the amount of production loss and salt-rejection loss resulting from normal use and exposure to feed water. In order to properly assess performance changes, it is important to maintain daily log readings for comparison.

Important: During performance comparisons, feed water temp, feed water salinity and system operating pressure must be taken into consideration and compensated for. After compensations, a 10% decline in productivity (GPH Flow) and/or a 10% increase in salt passage indicate that the RO Membrane Element may require cleaning.

Important: If the production rate has dropped dramatically since the last time the system was used, this may be due to drying out of the RO Membrane Element and/or fouling during storage. If the system has not been used for several months and the production rate has dropped dramatically since the last time used, try operating the system for 48 or more continuous hours to saturate the product water channel within the RO Membrane Element.

Important: A dramatic increase in product water production from one day to the next may be the result of a mechanical failure such as a broken O-ring or damaged RO Membrane Element.

RO Membrane Element Cleaning Water and Chemical Requirements

1. The Sea Recovery cleaning compounds are designed to clean in a closed loop configuration moderate fouling from the RO Membrane Element. If the RO Membrane Element is excessively fouled and in-field cleaning is not successful, the RO Membrane Element may be returned to Sea Recovery or to one of Sea Recovery's many service dealers for professional chemical cleaning. If your membrane requires professional cleaning, please contact Sea Recovery for a return authorization number, price quotation and return instructions. Note: Very heavily fouled RO Membrane Elements may be more cost-effective to replace rather than clean as the cleaning process will take several hours of labor, chemical cost and packaging and shipping charges to and from the factory.
2. **SRC MCC-1**, Membrane Cleaning Compound "No. 1" is an alkaline cleaner designed to clean biological fouling and slight oil fouling from the RO Membrane Element. Biological fouling is usually the first cause of the RO Membrane Element fouling. The system is constantly exposed to seawater and biological growth. If exposed to seawater and left to sit, the RO Membrane Element becomes fouled even with no actual system use. This

fouling is minimized with freshwater rinsing whenever the system is not in use.

3. **SRC MCC-2**, Membrane Cleaning Compound "No. 2" is an acid cleaner designed to clean calcium carbonate and other mineral deposits from the RO Membrane Element. Mineral fouling is a slow process that takes place during use of the system. Therefore, if the system has relatively few hours of use yet shows signs of RO Membrane Element fouling, then that fouling is likely biological. If the system has several thousand hours of use, then there may be some mineral fouling combined with biological fouling.
4. **SRC MCC-3**, Membrane Cleaning Compound "No. 3" is used for iron fouling. It is not included in the SRC Membrane Cleaning Chemical Kit. If the system's RO Membrane Element is fouled with rust from iron piping, then SRC CC-3 may be used for effective removal of light or moderate rust fouling. Heavily rust-fouled RO membranes may not be recoverable as rust not only fouls the membrane element but also damages the membrane surface.

Caution: Never expose the RO Membrane Element to chemicals other than those supplied by Sea Recovery Corporation. Use caution when operating the system in harbors that may be polluted with chemicals, oil or fuel, as these chemicals may damage the RO Membrane Element beyond repair.

RO Membrane Element Cleaning Instructions

Table 6: Product Water Required, in U.S. Gallons [Liters], for Cleaning of the RO Membrane Element

Chemical	Rinse water required Gallons [Liters]	Cleaning water required Gallons [Liters]	Second rinse water required Gallons [Liters]	Final rinse water required Gallons [Liters]	Total water required Gallons [Liters]
CC-1	5 [19]	5 [19]	5 [19]	5 [19]	20 [76]
CC-2	5 [19]	5 [19]	5 [19]	5 [19]	20 [76]
CC-3	5 [19]	5 [19]	5 [19]	5 [19]	20 [76]

1. Configure the System for a "**Once-Through Depressurized Rinse**" using the Product Relief Tube Kit as illustrated in this chapter.
2. Close the Inlet Sea Cock Valve.
3. Clean the Sea Strainer Mesh Screen.
4. Clean the Plankton Filter Element.
5. Replace the pre-filtration cartridges with new 5-micron Sea Recovery pre-filtration elements.
6. Fill the Rinse/Clean Solution Container with non-chlorinated product water.
7. Start the system. The rinse water rinses the entire system and discharge to waste.
8. Just prior to depleting the rinse water from the Rinse/Clean Solution Container, stop the system by pressing the "START/STOP" button twice to stop the system and also to abort the freshwater flush cycle.
9. Once again, fill the Rinse/Clean Solution Container with non-chlorinated product water.
10. Add to the product water in the Rinse/Clean Solution Container one container (plastic bottle 1.5 lbs.) of Sea Recovery Membrane Element Cleaning Compound SRC MCC 1, SRC MCC 2, or SRC MCC 3 (only one chemical as appropriate for the type of cleaning desired). **DO NOT ADD ANY OTHER CHEMICAL. DO NOT MIX MORE THAN ONE CHEMICAL TO THE WATER.**
11. Mix and thoroughly dissolve the solution in the Rinse/Clean Solution Container.
12. Configure the System for a "**RO Membrane Element Cleaning Closed Loop.**"
13. Disconnect the brine discharge line from the brine discharge tee and place it into the storage/cleaning container.
14. If the Clean/Rinse Outlet Valve is installed, position it to return to the storage/cleaning container.
15. Operate the system by pressing the "START/STOP" button. The membrane cleaning solution flows from the container through the system and back into the container in a closed loop configuration.
16. After approximately one hour of circulation, stop the system by pressing the "START/STOP" button twice, which will also disable the freshwater flush cycle.
17. Discard the cleaning chemical solution in a safe, environmentally friendly and legal manner.
18. To closed loop rinse the cleaning chemical from the system, again fill the Rinse/Clean Solution Container or bucket with 5 gallons of non-chlorinated product water.
19. Operate the system by pressing the "START/STOP" button. The rinse water flows from the container through the system and back into the container in a closed loop configuration.
20. After approximately 15 minutes of circulation, stop the system by pressing the "START/STOP" button twice, which will also disable the freshwater flush cycle.
21. Discard the rinse water in a safe, environmentally friendly and legal manner.
22. Perform a final rinse. Reconfigure the system for a "ONCE-THROUGH DEPRESSURIZED RINSE".
23. Reconnect the brine discharge line to the brine discharge tee.

24. If the Clean/Rinse Outlet Valve is installed, position it to discharge out toward the brine discharge connector.
25. One final time, fill the Rinse/Clean Solution Container with non-chlorinated product water.
26. Start the system. The rinse water rinses the entire system and discharge to waste.
27. Just prior to depleting the rinse water from the Rinse/Clean Solution Container, stop the system by pressing the “START/STOP” button once to initiate the Automated Freshwater Flush Cycle every 7 days. Press the “START/STOP” button twice to abort the Automated Freshwater Flush Cycle.
28. Reconfigure the system for normal operation:
    a) Reconnect the Sea Strainer outlet line or reposition the Inlet Rinse/Clean Valve to normal operation position.
    b) Remove the Product Relief Tube Kit.
    c) Reconnect the High-Pressure Hose.

The system may now be operated or left unattended for up to 4 to 8 weeks, refer to the short-term storage procedures. If the system will be stored without use for longer than 8 weeks, refer to the long-term storage procedures to winterize the system. If the system will be stored in freezing temperatures refer to short-term storage procedures or long-term storage procedures, as appropriate, to winterize the system.

Closed Loop Configuration

SINGLE MEMBRANE

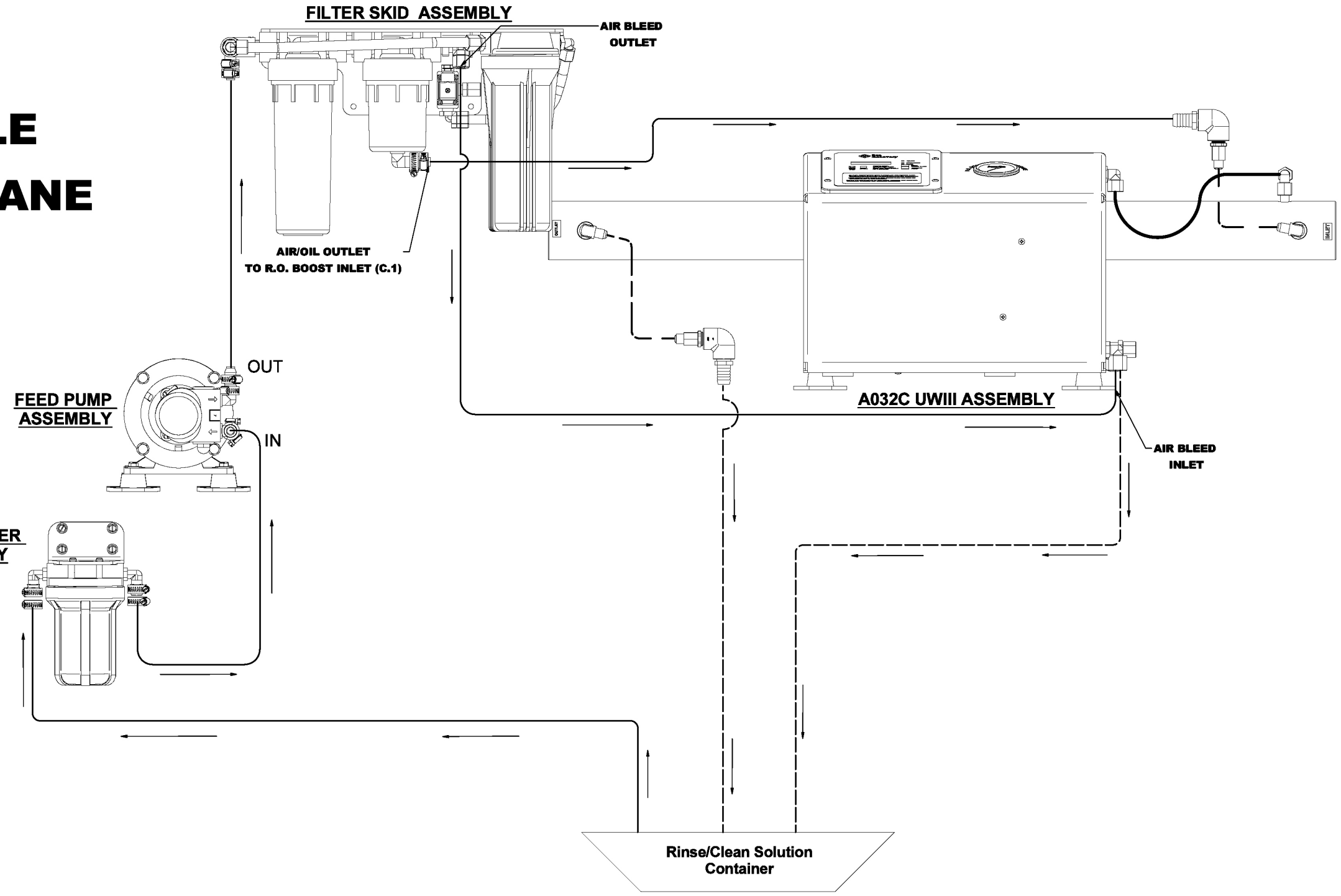

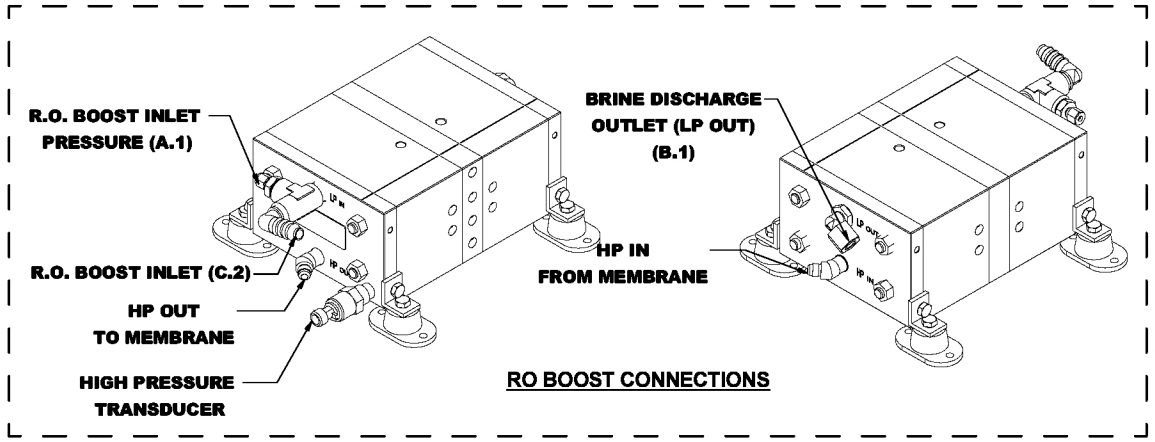

RO BOOST CONNECTIONS

NOTES:
1. PRESSURE CONNECTION INDICATES BY:
   A - R.O. BOOST INLET PRESSURE
   B - BRINE DISCHARGE
   C - AIR/OIL - R.O. BOOST

LINE SYMBOLS

LINE CONNECTIONS BEFORE THE R.O. BOOST PUMP ASSEMBLY	———
BRINE LINE CONNECTIONS	- - - - -
POTABLE WATER LINE CONNECTIONS	———

PROPRIETARY STATEMENT

THIS DOCUMENT CONTAINS INFORMATION THAT IS CONFIDENTIAL AND PROPRIETARY TO PARKER WATER PURIFICATION ("PARKER"). THIS DOCUMENT IS FURNISHED ON THE UNDERSTANDING THAT THE DOCUMENT AND THE INFORMATION IT CONTAINS WILL NOT BE COPIED OR DISCLOSED TO OTHERS OR USED FOR ANY PURPOSE OTHER THAN CONDUCTING BUSINESS WITH PARKER, AND WILL BE RETURNED AND ALL FURTHER USE DISCONTINUED UPON REQUEST BY PARKER. THE RECIPIENT OF THIS DOCUMENT THROUGH ITS OWN ANALYSIS AND TESTING IS SOLELY RESPONSIBLE FOR MAKING THE FINAL SELECTION OF THE APPLICABLE SYSTEM AND COMPONENTS AND ASSURING THAT ALL PERFORMANCE, ENDURANCE, MAINTENANCE, SAFETY AND WARNING REQUIREMENTS OF THE APPLICATION ARE MET. COPYRIGHT PARKER. YEAR OF COPYRIGHT IS FIRST YEAR INDICATED ON THIS DOCUMENT. ALL RIGHTS RESERVED.

DIMENSIONAL TOLERANCES - UNLESS OTHERWISE SPECIFIED			
MACHINED			WELDMENT
FRACTIONS	±1/16		TOLERANCE
.X	± .1*	±1.5mm	± .06
.XX	± .01*	±2.5mm	± .06
.XXX	± .005	±0.51mm	± .12
ANGLE	± 1 DEG.	±0.127mm	
ANGULAR ± 0' 30'			
125 UNLESS OTHERWISE SPECIFIED			

CUSTOMER -
PROJECT -
DRAWN - AZ DATE - 7/11/2014
CHECKED - PK DATE - 7/11/2014
APPROVED -RI DATE - 7/11/2014
DRY WEIGHT: 14.848 WET WEIGHT:
CONTRACT NO

Parker Sea Recovery
Parker Hannifin Corporation
Filtration Group / Water Purification
2630 E. El Presidio Street
Carson, CA 90810
Contact
Office: 310-608-5600
Fax: 310-608-5892
www.parker.com

PUMP, RO-BOOST, ASSY, UWIII

SIZE	DWG NO	REV
D	0561009	-

SCALE
1 OF 2

DWG NO 0561009

DUAL MEMBRANE

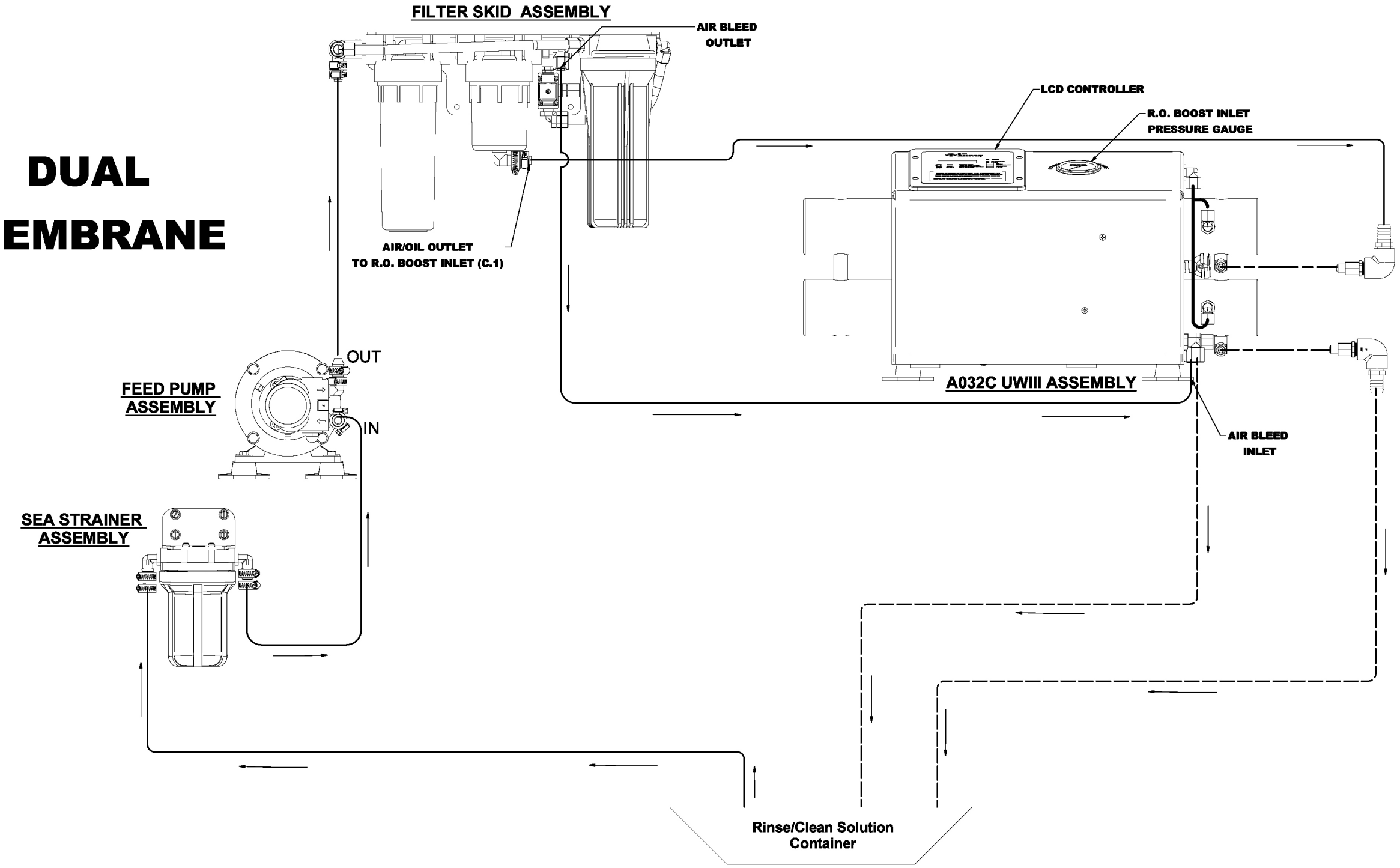

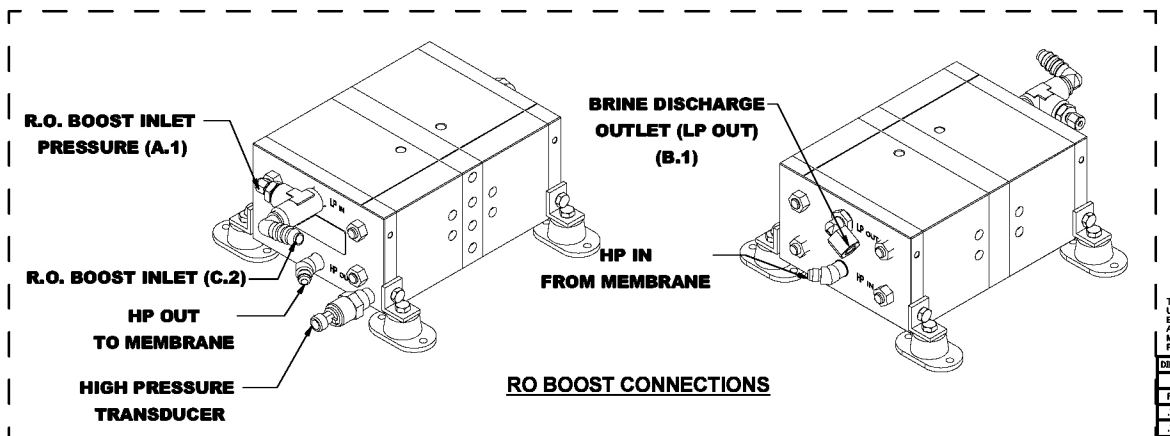

RO BOOST CONNECTIONS

NOTES:
1. PRESSURE CONNECTION INDICATES BY:
   A - R.O. BOOST INLET PRESSURE
   B - BRINE DISCHARGE
   C - AIR/OIL - R.O. BOOST

LINE SYMBOLS

LINE CONNECTIONS BEFORE THE R.O. BOOST PUMP ASSEMBLY

BRINE LINE CONNECTIONS

POTABLE WATER LINE CONNECTIONS

PRORIETARY STATEMENT

THIS DOCUMENT CONTAINS INFORMATION THAT IS CONFIDENTIAL AND PROPRIETARY TO PARKER WATER PURIFICATION ("PARKER"). THIS DOCUMENT IS FURNISHED ON THE UNDERSTANDING THAT THE DOCUMENT AND THE INFORMATION IT CONTAINS WILL NOT BE COPIED OR DISCLOSED TO OTHERS OR USED FOR ANY PURPOSE OTHER THAN CONDUCTING BUSINESS WITH PARKER, AND WILL BE RETURNED AND ALL FURTHER USE DISCONTINUED UPON REQUEST BY PARKER. THE RECIPIENT OF THIS DOCUMENT THROUGH ITS OWN ANALYSIS AND TESTING IS SOLELY RESPONSIBLE FOR MAKING THE FINAL SELECTION OF THE APPLICABLE SYSTEM AND COMPONENTS AND ASSURING THAT ALL PERFORMANCE, ENDURANCE, MAINTENANCE, SAFETY AND WARNING REQUIREMENTS OF THE APPLICATION ARE MET. COPYRIGHT PARKER. YEAR OF COPYRIGHT IS FIRST YEAR INDICATED ON THIS DOCUMENT. ALL RIGHTS RESERVED.

DIMENSIONAL TOLERANCES - UNLESS OTHERWISE SPECIFIED					
MACHINED			WELDMENT	CUSTOMER -	
FRACTIONS	±1/16		TOLERANCE	PROJECT -	
.X	± .1*	±1.5mm	± .06		
.XX	± .01*	±2.5mm	± .06		
.XXX	± .005	±0.51mm	± .12	DRAWN - AZ	DATE - 7/11/2014
ANGLE	± 1 DEG.	±0.127mm		CHECKED - PK	DATE - 7/11/2014
ANGULAR ± 0° 30'				APPROVED -RI	DATE - 7/11/2014
125 UNLESS OTHERWISE SPECIFIED				DRY WEIGHT: 14.849 INJECT WEIGHT:	
				CONTRACT NO	

Parker Sea Recovery
Parker Hannifin Corporation
Filtration Group / Water Purification
2630 E. El Presidio Street
Carson, CA 90810
Contact
Office: 310-608-5600
Fax: 310-635-5892
www.parker.com

PUMP, RO-BOOST, ASSY, UWIII

SIZE	DWG NO	REV
D	0561009	-

SCALE

2 OF 2

DWG NO 0561009

SH 2

A

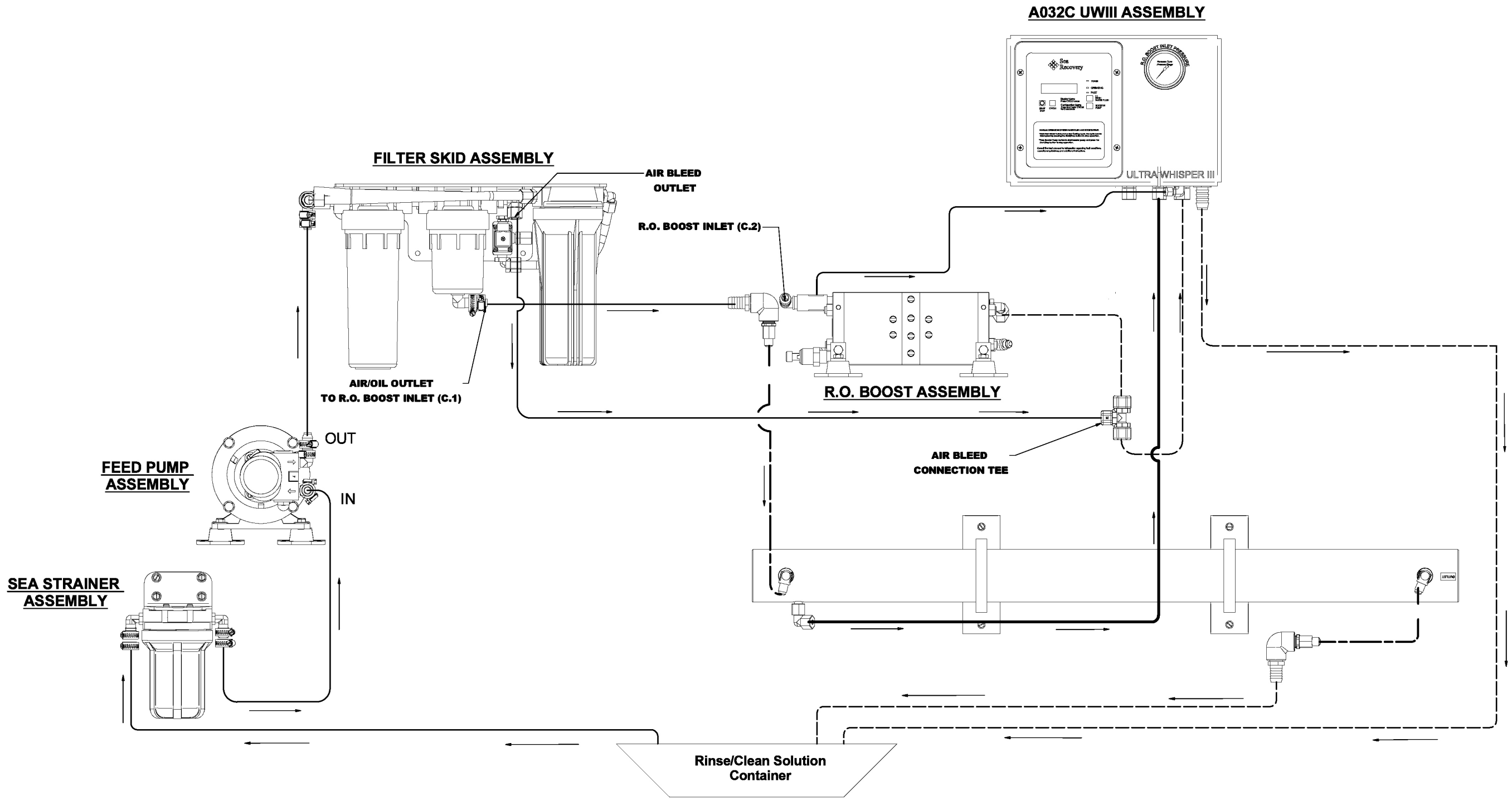

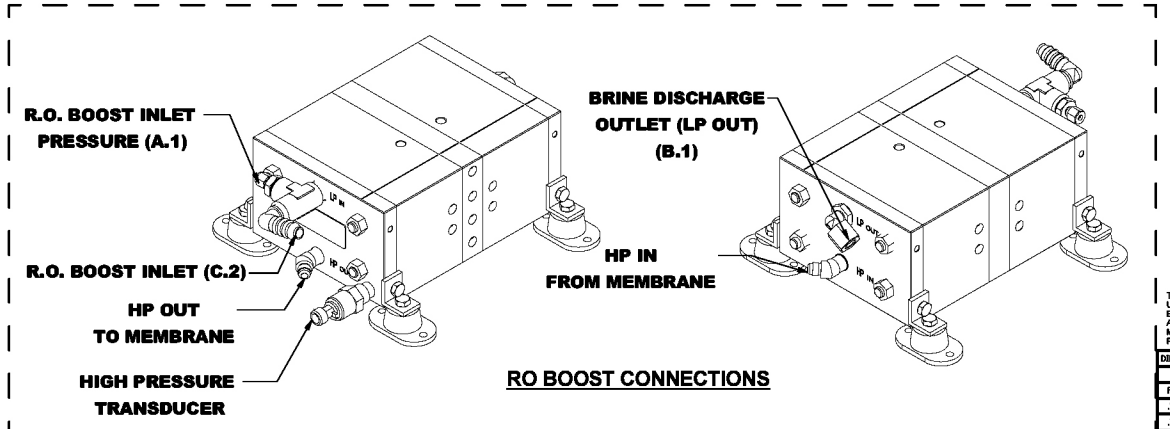

RO BOOST CONNECTIONS

NOTES:
1. PRESSURE CONNECTION INDICATES BY:
   A - R.O. BOOST INLET PRESSURE
   B - BRINE DISCHARGE
   C - AIR/OIL - R.O. BOOST

LINE SYMBOLS

LINE CONNECTIONS BEFORE THE R.O. BOOST PUMP ASSEMBLY

BRINE LINE CONNECTIONS

POTABLE WATER LINE CONNECTIONS

PROPRIETARY STATEMENT

THIS DOCUMENT CONTAINS INFORMATION THAT IS CONFIDENTIAL AND PROPRIETARY TO PARKER WATER PURIFICATION ("PARKER"). THIS DOCUMENT IS FURNISHED ON THE UNDERSTANDING THAT THE DOCUMENT AND THE INFORMATION IT CONTAINS WILL NOT BE COPIED OR DISCLOSED TO OTHERS OR USED FOR ANY PURPOSE OTHER THAN CONDUCTING BUSINESS WITH PARKER, AND WILL BE RETURNED AND ALL FURTHER USE DISCONTINUED UPON REQUEST BY PARKER. THE RECIPIENT OF THIS DOCUMENT THROUGH ITS OWN ANALYSIS AND TESTING IS SOLELY RESPONSIBLE FOR MAKING THE FINAL SELECTION OF THE APPLICABLE SYSTEM AND COMPONENTS AND ASSURING THAT ALL PERFORMANCE, ENDURANCE, MAINTENANCE, SAFETY AND WARNING REQUIREMENTS OF THE APPLICATION ARE MET. COPYRIGHT PARKER. YEAR OF COPYRIGHT IS FIRST YEAR INDICATED ON THIS DOCUMENT. ALL RIGHTS RESERVED.

DIMENSIONAL TOLERANCES - UNLESS OTHERWISE SPECIFIED			
MACHINED			WELDMENT
FRACTIONS	±1/16		TOLERANCE
.X	± .1*	±1.5mm	± .06
.XX	± .01*	±2.5mm	± .06
.XXX	± .005	±0.51mm	± .12
ANGLE	±1 DEG.	±0.127mm	
ANGULAR ± 0' 30'			
125 UNLESS OTHERWISE SPECIFIED			

CUSTOMER -

PROJECT -

DRAWN - AZ DATE - 7/11/2014

CHECKED - PK DATE - 7/11/2014

APPROVED - RI DATE - 7/11/2014

DRY WEIGHT: 14.840 kgs WET WEIGHT:

CONTRACT NO

Parker Sea Recovery

Parker Hannifin Corporation
Filtration Group / Water Purification
2630 E. El Presidio Street
Carson, CA 90810

Contact
Office: 310-608-5600
Fax: 310-608-5822
www.parker.com

PUMP, RO-BOOST, ASSY, UWIII

SIZE	DWG NO	REV
D	0561009	-

SCALE 1 OF 1

DWG NO 6001950

1 - 52

Chapter 10

Troubleshooting

Error ID 1: High Salinity Fault

System produces expected product water flow with normal operating pressure after compensating for Feed Water Salinity and Temperature; however, the Product Water salinity is above 100ppm for more than 10 consecutive seconds.

1. We recommend using a portable TDS meter to determine if the problem is with the RO Membrane Element or with the Salinity Probe and Electronic monitoring system.
2. A damaged or worn Product Water O-ring at one of the End Plugs within the High Pressure Vessel is allowing Feed Water to mix with Product Water, which would typically result in higher than normal Product Water Flow. However, a small nick in the O-ring may allow enough Feed Water to mix with the Product Water to cause the condition without resulting in a noticeable increase in Product Water Flow.
3. A crack in one of the End Plugs within the High Pressure Vessel is allowing Feed Water to mix with Product Water, which would typically result in higher than normal Product Water Flow. However, a small crack may allow enough Feed Water to mix with the Product Water to cause the condition without resulting in a noticeable increase in Product Water Flow.
4. RO Membrane Element is fouled due to normal use and requires cleaning.
5. Salinity Probe has debris on the probe causing the system to read poor water quality. Clean the Salinity Probe with a toothbrush.

Error ID 2: High Pressure Fault

If the High Pressure Sensor increases beyond 950 PSI and the System shuts down, press the "Start/Stop" button. A high pressure fault can be caused by:

- Low Temperature Feed Water
- High Salinity Feed Water
- Fouled RO Membrane Element
- Blockage in the Brine Discharge Line
- Blockage in the Product Water Line

Error ID 3: Low Pressure Fault

A low pressure fault can occur when the following conditions occur:

- The value at the Low Pressure Sensor is below 4 PSI for more than 20 seconds
- The Low Pressure Sensor is disconnected or malfunctioning
- The value at the High Pressure sensor is below 4 PSI for more than 20 seconds
- The High Pressure Sensor is disconnected or malfunctioning

To troubleshoot, check for the following:

- Cock Valve must be fully open
- Air suction leaks at all components and fittings prior to the Feed Pump
- Whether or not the Sea Strainer Mesh Screen is clean (no manufacturing or installation debris) and if air suction leaks are present
- Whether or not the Pre-Filter Element is clean (no manufacturing or installation debris)
- Whether or not the Plankton Filter Element is clean (no manufacturing or installation debris)

- No kinks, blockages or air suction leaks in the inlet line
- The Feed Pump is operational and delivering flow and pressure
- Whether or not the Inlet Thru-Hull Fitting is clean (no manufacturing or installation debris) and if air suction leaks are present
- Caulking compound within the opening
- Shipping cover or tape below the hull in the water
- Casting slag on the “fingers” below the hull in the water or within the orifice
- Plastic bag or other debris in the water below the hull in the water

Error ID 4: Low Voltage Fault

Check system voltage inside the Control Panel. The system must receive adequate voltage at start up and during operation for normal operation. DC systems will shut down by design when the voltage falls below:

- 12 VDC Systems: 10.5 VDC
- 24 VDC Systems: 21.5 VDC

Loud or Whining Pump

Loud or whining pump is common after long use. The cause of the loud noise is a drop motor rpms or cavitation. If the pump is cavitating, check for clogs, kinks, or dirty sea-strainer. If the noise still persists, check motor supply voltage at the system source and at the motor. If there is not enough supply voltage, it will cause the motor to run at a lower rpm.

Remaining Pressure in the System After Shut Down

Caution: Do not open pressurized high pressure water lines to relieve pressure in the system. Doing so may cause bodily injury.

- The orifice mounted in the air/oil separator maybe clogged and need to be cleaned or replaced. Debris or biological matter may be clogging up the orifice hole. Use rubbing alcohol and compressed air to clean the orifice. After cleaning, if there is degradation (pitting) to the orifice, then replace the orifice (refer to exploded parts views in chapter 12).

- Check all brine line for kinks or blockages. If there is an auxiliary valve on the brine line, make sure it is fully open. Do not close auxiliary valves until system is done with the freshwater flush.

- Make sure the brine discharge thru hull is not shared with any other system on the boat. When the brine thru hull fitting shared with another system it will restrict the brine discharge causing a slow bleed off of pressure, this causes pressure to remain in the system longer than it should.

- Brine line being used is too small for where the system is mounted on the boat and how long of a brine discharge line is. The brine line might be too restrictive causing pressure to release at a slow rate.

Stuck or Blocked R.O. Boost

- The cause of a stuck R.O. Boost is from numerous factors, remaining pressure, trapped air, debris, or system installation. The most common is from remaining pressure in the system. When there is pressure stuck in the R.O Boost after shut down, the pistons in the R.O. Boost start to migrate out its natural timing sequence. After a long period of time, pressure will relieve through membrane leaving the R.O. Boost stuck or blocked.

- The R.O. Boost timing can be reset with the hex plugs on the side of the block. By supplying adequate pressure to one of the plug holes to push one of the pistons back in timing sequence. Contact your Sea Recovery Dealer for the further information. After resetting the R.O. Boost check all equipment supporting the R.O Boost. If the problem is not corrected it will lead to stuck or blocked R.O. Boost or worse.

Caution: Resetting the R.O. Boost incorrectly may cause damage to the internal seals of the R.O. Boost, leaving the R.O Boost inoperable and in need of a rebuild or replace.

3-Way Product Water Diversion Valve Abnormalities

1. The Water Quality is less than 750ppm; however, the Diversion Valve does not divert potable water to the post filtration section and onto the boat's potable water storage tank.

2. The Diversion Valve is not energizing, and the valve's coil is cool to the touch after several minutes of operation with the Water Quality is less than 750ppm.

   - The 3-way Product Water Diversion Valve may have a defective solenoid coil.
   - There may be a loose wire connection at the Control Printed Circuit Board or the solenoid's din connector.
   - The Control Printed Circuit Board may not be delivering 12 VDC to the solenoid.

3. The 3-way Diversion Valve is receiving 12 VDC when the Water Quality is less than 750 ppm safe water. The valve's solenoid coil is not defective, nor is it warm or hot to the touch; however, the Diversion Valve does not divert potable water to the post filtration section and onto the boat's potable water storage tank.

   The Diversion Valve internal ports may have been moved by over tightening of the black tube fittings causing blockage internally and require adjustment. Remove Diversion Valve from the system and adjust ports.

High-Pressure or Low-Pressure Abnormalities Due to Mismatch of Components

The Ultra Whisper System is designed to recover as product water a fixed percentage of the feed water. The system self-adjusts the operating pressure in order to maintain a constant and set product water flow. Therefore, the system will never experience greater than or less than normal product water flow, unless there is a failure or abnormality.

Three components must be properly matched in order to attain acceptable operating pressure limits and resulting product water production limits. The R.O. BOOST, the RO Membrane Element and the Feed Pump output flow of water must all be matched. Upon leaving Sea Recovery's factory at the time of shipment, these components have been matched and tested together as a system.

If the initial Sea Recovery customer (distributor, dealer or boat builder) has mistakenly interchanged one or more of these components from other systems in their stock, this will cause a mismatch resulting in insufficient operating pressure, insufficient product water flow, excessive operating pressure or excessive product water flow. If one or more of these components has recently been replaced, it may have been replaced with the incorrect component.

If the system is new and being operated for the first time or if one or more of the above-mentioned components has recently been replaced, check to ensure that the three components are properly matched. Refer to the following two pages.

FEED PUMP: If the Feed Pump has been improperly changed to a higher size code (i.e., from 140 GPH to 190 GPH), product water flow will increase along with higher-than-normal operating pressure. The High-Pressure Transducer will eventually signal the system to shut down due to excess pressure at the R.O. BOOST Feed Inlet. If the Feed Pump has been improperly changed to a lower size code (i.e., from 190 GPH to 140 GPH), product water flow will decrease along with lower-than-normal operating pressure and poor product water quality.

RO MEMBRANE ELEMENT: If the RO Membrane Element has been improperly changed to a HIGHER size code from "A" to "B" or "C" or from "B" to "C," then product water flow will not change and the operating pressure will decrease resulting in poor product water quality. If the RO Membrane Element has been improperly changed to a

lower size code from “B” to “A” or from “C” to “B” or “A,” then product water flow will not change but the operating pressure will increase. The High-Pressure Transducer will eventually signal the system to shut down due to excess pressure to the membrane.

Product Water Abnormalities

- Insufficient Product Water Flow
- Excessive Product Water Flow
- Poor Quality Product Water

The production of the system (product water flow) and the quality of the product water (high quality indicates low salinity; low quality indicates high salinity) are dependent upon the proper amount of feed water flow and operating pressure at the RO Membrane Element. Product water flow or quality abnormalities can be the result of pressure abnormalities described on the previous pages, which are repeated below.

Production abnormalities can also be the result of worn seals, worn O-rings, cracks or damage at sealing surfaces, or a fouled RO Membrane Element.

Quality abnormalities can also be the result of worn seals, worn O-rings, cracks or damage at sealing surfaces, or a fouled RO Membrane Element, Feed Water Temperature, and/or feed water salinity.

Lower-Than-Normal Product Water Flow

A blockage in the suction line, resulting in a heavy vacuum reading at the Feed Pump Inlet, will cause the Feed Pump to cavitate and lead to a reduction of feed water flow and pressure. The Ultra Whisper System is designed to recover as product water a set percentage of the feed water. Therefore, if the Feed Pump flow decreases due to cavitation, then the product water flow will decrease accordingly.

Likewise, a blockage in the pre-filtration, resulting in a low pressure reading at the RO Boost Inlet Pressure Gauge, will restrict the Feed Pump water flow and feed water pressure. Again, the Ultra Whisper System is designed to recover as product water a set percentage of the feed water. Therefore, if the Feed Pump flow decreases due to a blockage at the pre-filtration, then the product water flow will decrease accordingly.

A decrease in product water flow can also be caused by a fouled RO Membrane Element. However, as the RO Membrane Element becomes fouled, the RO Boost Inlet Pressure Gauge will register higher-than-normal pressure as the system self-adjusts to overcome the fouling. The High-Pressure Transducer will eventually signal the system to shut down due to excess pressure at the RO Boost Inlet Pressure Gauge when pressure increases to 215 PSI.

Lower-than-normal feed water temperature causes the RO Membrane to require greater operating pressure in order to maintain the normal product water production. The Ultra Whisper System self-adjusts by increasing the operating pressure to compensate for lower-than-normal feed water temperature.

A blockage in the product water line will cause lower-than-normal product water flow. The Ultra Whisper System will attempt to self-adjust the operating pressure to overcome the drop in product water flow caused by a blockage in the product water line. The High-Pressure Transducer will eventually signal the system to shut down due to excess pressure at the RO Boost Inlet Pressure Gauge, when the pressure increases above 215 PSI.

Higher-Than-Normal Product Water Flow

Mismatching of system components can cause higher-than-normal product water flow accompanied by increased operating pressure. The RO Boost Inlet-Pressure Transducer will eventually signal the system to shut down due to excess pressure greater than 215 PSI at RO Boost Inlet Gauge.

A worn or broken product water O-ring at the end plug inside the high-pressure vessel will allow feed water to bypass into the product water to produce a greater-than-normal amount of product water. The resulting mixture of product water and feed water will be of low quality, or high in salinity. This will also show up as lower-than-normal operating pressure control menu LCD screen.

A crack in the end plug between the feed water port and product water port or a rough surface at the product water O-ring will also allow feed water to bypass into the product water causing the product water flow to increase. The resulting mixture of product water and feed water will be of low quality, or high in salinity. This will also show up as lower-than-normal operating pressure at the control menu LCD screen.

Higher-than-normal feed water temperature causes the RO membrane to require less operating pressure in order

to maintain the normal product water production. The Ultra Whisper System self-adjusts by decreasing the operating pressure to compensate for higher-than-normal feed water temperature. Product water quality will decrease, or increase in salinity, as the operating pressure is decreased to compensate for the higher-than-normal feed water temperature.

Low Product Water Quality (increase of salt content in the product water)

Mismatching of system components can cause lower-than-normal operating pressure resulting in low-quality product water. A worn or broken product water O-ring at the end plug inside the high-pressure vessel will allow feed water to bypass into the product water. The resulting mixture of product water and feed water will be of low quality, or high in salinity. This will also show up as lower-than-normal membrane pressure at the control menu LCD screen.

A crack in the end plug between the feed water port and product water port or a rough surface at the product water O-ring will also allow feed water to bypass into the product water. The resulting mixture of product water and feed water will be of low quality, or high in salinity. This will also show up as lower-than-normal membrane pressure at the control menu LCD screen.

Higher-than-normal feed water temperature causes the RO membrane to require less operating pressure in order to maintain the normal product water production. The Ultra Whisper System self-adjusts by decreasing the operating pressure to compensate for higher-than-normal feed water temperature. Product water quality will decrease, or increase in salinity, as the operating pressure is decreased to compensate for the higher-than-normal feed water temperature.

A fouled RO Membrane Element will produce poor-quality product water since the RO Membrane Element allows a constant passage of dissolved solids, salt and other minerals. The water molecules passing through the RO Membrane Element dilute the constant amount of dissolved solids. Therefore, the greater the amount of water passage, the lower the concentration, or lower percentage, of dissolved solids. As the RO Membrane Element becomes fouled, less water passes through it to dilute the constant dissolved solids' passage. This results in poor-quality product water. The Ultra Whisper System self-adjusts the operating pressure to overcome the fouling. Eventually the High-Pressure Transducer will signal the system to shut off due to excessive operating pressure above 925 PSI.

Product Water Tank has Foul Smell

If there is a Sulfurous odor (rotten egg smell) in the product tank, check for the following:

1. Dirty Post-Filtration Element.
   - Post-Filtration Elements has biological matter that has grown on them and now decaying. When this biological matter decomposes, sulfur gas is released as a byproduct.
   - Check and replace as necessary Pre-filtration and Post Filtration Elements.
2. Charcoal Filter Element requires replacement.
   - Change the Charcoal Filter Element every 3 months.
3. Product Tank is dirty or has biological growth in it.
   - Clean and Chlorinate product tank.

Chapter 11

Electrical Information

Caution: ELECTRICAL SHOCK HAZARD. A Volt/Ohm Meter will be necessary for some troubleshooting and subsequent corrective actions. The following procedures expose the technician to high voltage and electrical shock hazard. Only attempt this if you are a qualified electrician and surrounding conditions are safe.

Caution: Always allow slack in electrical cables. Allow the cable to enter or leave from the strain relief in a straight manner for several inches to ensure proper connection, to relieve stress to the cable and fitting, and to allow ease of detachment and reattachment for maintenance or replacement. If electrical cables are pulled tight causing them to bend at the strain relief they will pull out of the strain relief causing a dangerous electrical shock condition, the wire may break, and the strain relief will lose its watertight integrity.

Caution: Review the “Check Off Q.C. Sheet” that accompanied this Owner's Manual and the Invoice that accompanied this Ultra Whisper System to ensure that it has been configured from Sea Recovery for the appropriate and proper DC Voltage or AC Voltage, Cycles, and Phase.

Notes:

1. A 12 VDC System will NOT function from 24 VDC Power.
2. A 24 VDC System will NOT function from 12 VDC Power.
3. An AC 50 Hz System will operate at higher than normal pressure and will over heat the Feed Pump Motor
4. An AC 60 Hz System will operate at lower than normal pressure, will produce 17% less product water than specified, and the product water will be high in salt content if connected to a 50 Hz power source.

Remove the Front cover from the system controller to access the Main Terminal Strip and Printed Circuit Board. System configuration, optional Accessories present, and the specific model all are contributing factors to the amount of electrical connections required during installation. The following items are listed but may either not be present (Optional Accessory not ordered) or may already be connected. Track each electrical wire to ensure proper connection. (*** = Optional Accessory)

Ultra Whisper System Required Electrical Connections

- Feed Pump Electric Motor
- Low Pressure Transducer
- High Pressure Transducer
- Fresh Water Flush Pump Electric Motor
- 3-way Product Water Diversion Solenoid Valve
- *** UV Sterilizer
- *** Remote Controller
- *** Soft Start
- Electrical Power to the System

ELECTRICAL REQUIREMENTS

1. Amperage Notes:

Alternating Current Powered Systems:

During start up, the current of the Feed Water Pump Alternating Current Electric Motor surges to “Locked Rotor” or “Starting Amps” amperage for a fraction of a second after which the Electric Motor begins to rotate. After the Electric Motor achieves full RPM rotation the current drops to normal running load. This process will take less than 1/2 second.

Therefore, the maximum surge current that the power source must be able to deliver equals the Feed Water Pump Electric Motor starting amperage listed in the Specification Chapter of this manual. If the AC Power Source (AC Generator or Dock Power) is insufficient the Ultra Whisper Electric Motor will not gain the full RPM speed needed for it to switch to running amperage mode, will consume “starting amps” amperage continually, and will either trip the power source circuit breaker or overheat and short out. Similar results will occur if the Frequency (Hz or Cycles) drop below the minimum requirement, which will occur from a weak AC Generator that slows down when a load is applied to it. This is an installation problem (insufficient power supply), it is not an Ultra Whisper problem.

Direct Current Powered Systems:

During start up, the current of the Feed Water Pump Direct Current Electric Motor draws high amperage for a fraction of a second after which the Electric Motor begins to rotate. After the Electric Motor achieves full RPM rotation the current drops to normal running load. This process will take less than 1/2 second.

Therefore, the battery bank power source must be fully charged and of sufficient amperage storage capacity to provide and maintain the full voltage (12 VDC or 24 VDC as appropriate) at the instant of starting the Feed Water Pump Electric Motor. If the battery bank power is insufficient the Ultra Whisper electronic circuit may “drop out” due to power loss before the Electric Motor even begins to rotate. This is an installation problem (insufficient power supply), it is not an Ultra Whisper problem. Low DC voltage to the Feed Pump electric motor will also be caused by insufficient diameter power cables connected from the battery bank, through the boat’s circuit breaker, and on to the Ultra Whisper controller.

Power Source Requirements:

Check line voltage and frequency to ensure that it agrees with the system nameplate. Grounding and circuit protection should be done in accordance with National Electrical Code. See connection diagram on nameplate of motor or refer to the diagrams within this manual.

Voltage	HZ (AC)	Min. HZ	Max. HZ	Min. Voltage	Max. Voltage
DC Systems					
12 VDC	N/A	N/A	N/A	11 VDC	15 VDC
24 VDC	N/A	N/A	N/A	22 VDC	30 VDC
AC Systems					
120 VAC	60 HZ	57 Hz	62 Hz	108 VAC	132 VAC
230 VAC	60 HZ	58 Hz	62 Hz	207 VAC	253 VAC
100 VAC	50 HZ	48 Hz	52 Hz	90 VAC	110 VAC
220 VAC	50 HZ	48 Hz	52 Hz	198 VAC	242 VAC

Feed Pump Motor Electrical Specification

12 and 24 VDC	UW 400 12V / 24V	UW 600 24V
Nominal Operating Amps	21/10.5	33/16.5
Maximum Motor Amps	28/13.4	39/19.5
Starting Amps	45/22.5	65/32.5
Horse Power	0.3	0.5
Recommended Circuit Breaker	50/25	70/35
Minimum Size Power Wire AWG	6/8	6/8

12 and 24 VDC	UW 400 12V / 24V	UW 600 24V
Minimum Size Power Wire mm2	13/8	13/8

115 and 230 VAC 60 Hz	UW 400 115V / 230V	UW 600115V / 230V
Nominal Operating Amps	5.3/2.7	7.5/3.7
Maximum Motor Amps	6.6/3.5	8.6/4.3
Starting Amps	25/12.5	46/23
Horse Power	0.3	0.5
Recommended Circuit Breaker	10/5	10/5
Minimum Size Power Wire AWG	12	12
Minimum Size Power Wire mm2	3	3

110 and 220 VAC 50 Hz	UW 400 110V / 220V	UW 600 110V / 220V
Nominal Operating Amps	5.1/2.5	7.3/3.5
Maximum Motor Amps	5.2/2.7	7.4/3.7
Starting Amps	26/13	44/22
Horse Power	0.3	0.5
Recommended Circuit Breaker	10/5	10/5
Minimum Size Power Wire AWG	12	12
Minimum Size Power Wire mm2	3	3

Nominal Operating Amperage Will Increase if:

- The Feed Water Temperature is Lower than 77º Fahrenheit / 25º Celsius.
- The Feed Water Salinity is Greater than 35,000 PPM TDS (3.5% Total Dissolved Solids)
- The RO Membrane Element becomes fouled
- The RO Membrane Element is new and on the minus 15% side of the specifications

Nominal Operating Amperage Will Decrease if:

- The Feed Water Temperature is Higher than 77º Fahrenheit / 25º Celsius.
- The Feed Water Salinity is Less than 35,000 PPM TDS (3.5% Total Dissolved Solids)
- The RO Membrane Element is new and on the plus 15% side of the specifications

Wire Size Cross Reference American Wire Gauge (AWG) vs. Metric Wire Sizes

AWG	Diameter Inch	Square Inch (In^2)	Diameter Millimeters	Square Millimeters (mm^2)
0000	0.4600	0.1661	11.6840	107.1649
000	0.4096	0.1317	10.4038	84.9683
00	0.3648	0.1045	9.2659	67.3980
0	0.3249	0.0829	8.2525	53.4609
1	0.2893	0.0657	7.3482	42.3871

AWG	Diameter Inch	Square Inch (In^2)	Diameter Millimeters	Square Millimeters (mm^2)
2	0.2576	0.0521	6.5430	33.6069
3	0.2294	0.0413	5.8268	26.6516
4	0.2043	0.0328	5.1892	21.1385
6	0.1620	0.0206	4.1148	13.2913
8	0.1285	0.0130	3.2639	8.3626
10	0.1019	0.0082	2.5883	5.2588
12	0.0808	0.0051	2.0523	3.3064
14	0.0641	0.0032	1.6281	2.0809
16	0.0508	0.0020	1.2903	1.3070
18	0.0403	0.0013	1.0236	0.8225
20	0.0320	0.0008	0.8128	0.5186
22	0.0254	0.0005	0.6452	0.3267

American Wire Gauge			Metric Wire Gauge		Metric Wire
AWG	dia inch	sq. inch	dia mm	sq mm	Size mm^2
0000	0.4600	0.1661	11.6840	107.1649	100
000	0.4096	0.1317	10.4038	84.9683	85
00	0.3648	0.1045	9.2659	67.3980	65
0	0.3249	0.0829	8.2525	53.4609	50
1	0.2893	0.0657	7.3482	42.3871	40
2	0.2576	0.0521	6.5430	33.6069	32
3	0.2294	0.0413	5.8268	26.6516	32
4	0.2043	0.0328	5.1892	21.1385	19
6	0.1620	0.0206	4.1148	13.2913	13
8	0.1285	0.0130	3.2639	8.3626	8
10	0.1019	0.0082	2.5883	5.2588	5
12	0.0808	0.0051	2.0523	3.3064	3
14	0.0641	0.0032	1.6281	2.0809	2
16	0.0508	0.0020	1.2903	1.3070	1
18	0.0403	0.0013	1.0236	0.8225	0.8
20	0.0320	0.0008	0.8128	0.5186	0.5
22	0.0254	0.0005	0.6452	0.3267	0.35

Chapter 12

Exploded Parts View

B001380001 INSTALLATION KIT

ITEM NO.	QTY.	PART NUMBER	DESCRIPTION
1	1	0112071900	ELB90 3/8MPTX1/2BARB NYL
2	1	0112021800	ELB90 3/8MPTX5/8BARB NYL
3	1	0204591869	CONN 3/8MPTX3/8TU PLASTIC
4	1	0204092469	CONN 3/8MPTX1/2TU PLASTIC
5	12	061172143016	SC HEX "A" 1/4X1"L 316SS
6	12	061080043000	WASHER FLAT 1/4 SS
7	14	05181434AA	CLAMP HOSE 3/4 316SS
8	1	B006380002	SEA STRAINER UW
9	30 FT	0339076100	HOSE HD 5/8 CLR BRAID NYL
10	15 FT	0312121969	TUBE 1/4 BLK NYL
11	30 FT	0312123569	TUBE 3/8 BLK NYL
12	30 FT	0312124269	TUBE 1/2 BLK NYL
13	4	B651380001D	OWNERS MANUAL ULTRA WHISPER III
14	1	07131002ST-04	WRENCH FILTER BOWL PF UW

NOTE: ABOVE PARTS TO BE PLACED IN POLYBAG

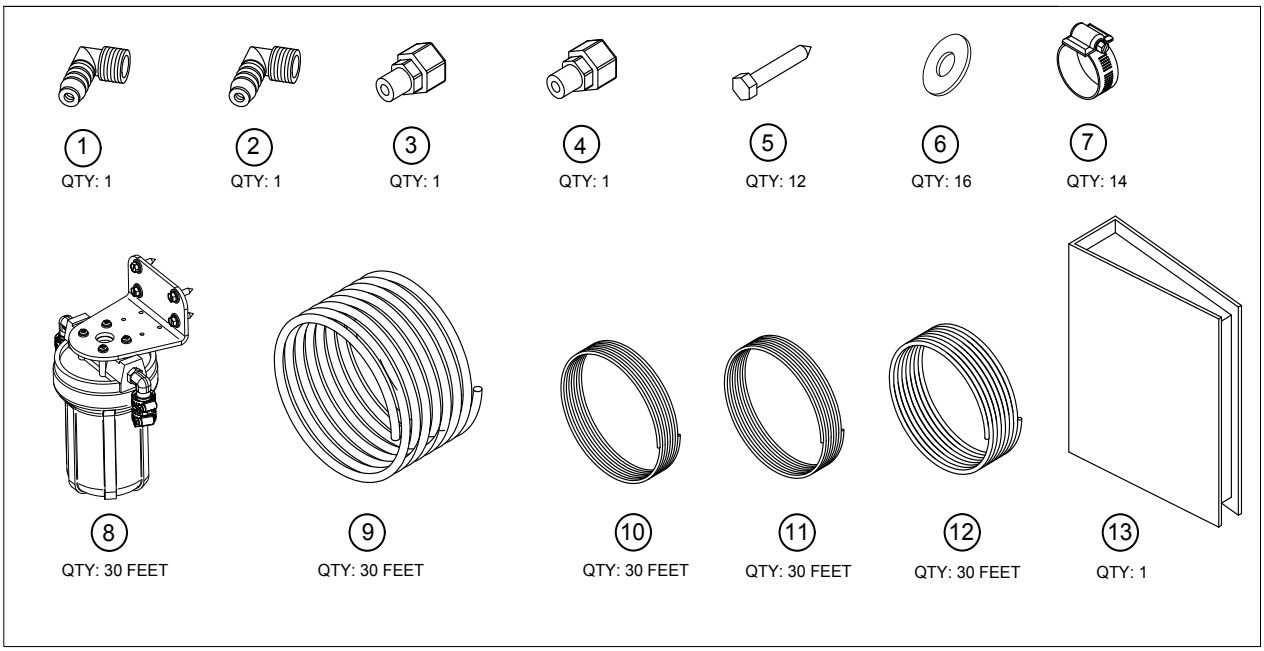

B006380002 SEA STRAINER UWDX 5IN

ITEM NO.	QTY.	PART NUMBER	DESCRIPTION
1	1	20200402102	BRACKET SINGLE FILTER
2	1	0819245201	ELEMENT,100 MICRON, 5"
3	1	0713020973	FILTER HOUSING-LID 0.50 X 5
4	2	0112022500	ELB90 .50 MNPT x .62 BARB NYLON
5	4	061172143016	SCREW,HEX A,.25x1.00,SS
6	4	05181434AA	HOSE CLAMP .75 SS
7	4	061170628016	SC PHIL PAN A #10 X 1 SS
8	4	065080028000	WASHER FLAT #10 NYLON
9	4	061080043000	WASHER,FLAT,1/4",SS

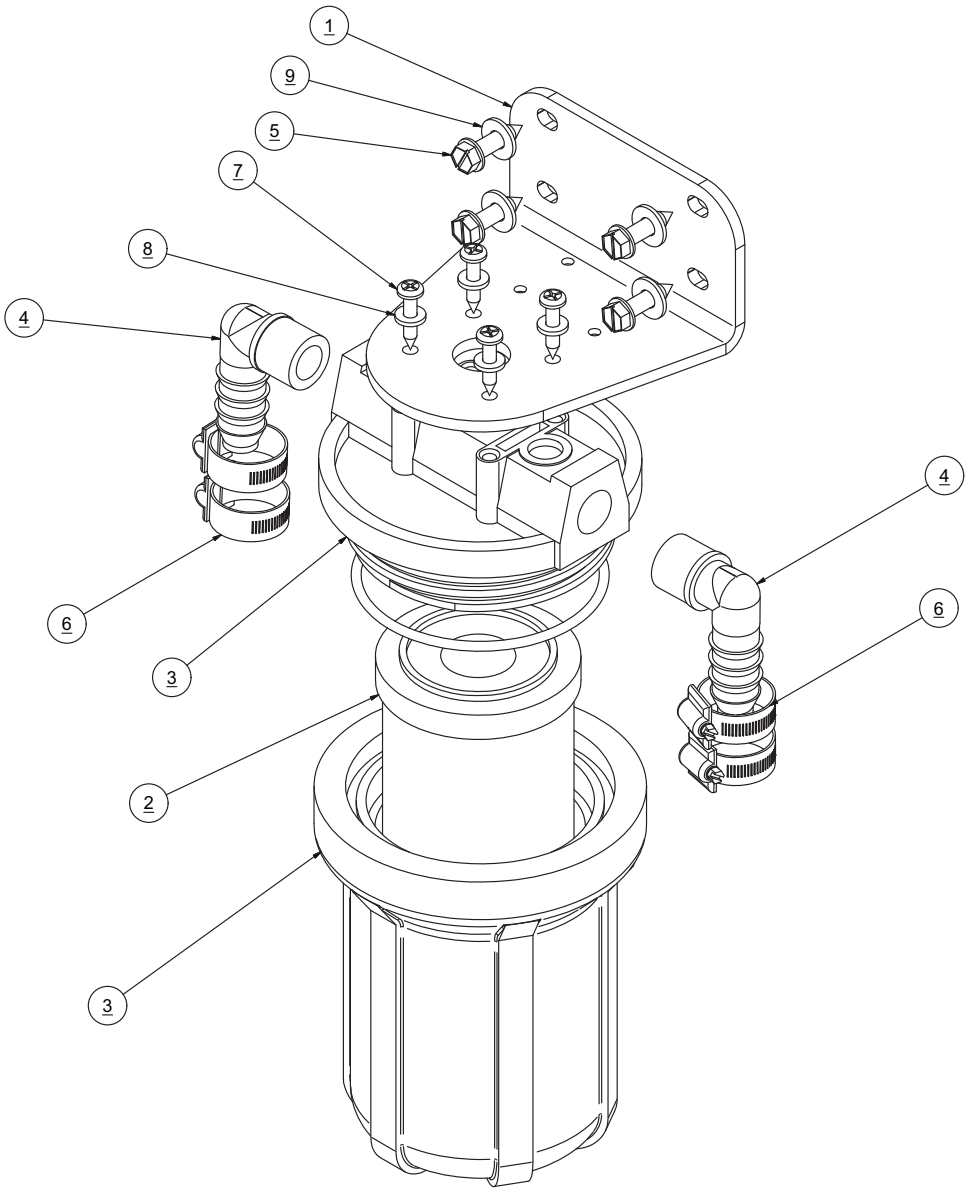

B007300022 FEED PUMP ASSY UW 400-12V

ITEM NO.	QTY.	PART NUMBER	DESCRIPTION
1	1	12176402DP	PUMP ROTARY VANE 140GPH #15
2	1	12227601DP	COUPLING PUMP-MOTOR SHAFT
3	1	12227701DP	ADAPTER PUMP ROTARY VANE
4	1	15093110CF	MOTOR .33HP 12 VDC
5	4	2115030120	RUBBER MOUNT 55 AQUA SERIES
6	2	0112022500	ELB90 .50 MNPT x .62 BARB NYLON
7	4	05181434AA	HOSE CLAMP .75 SS
8	4	061080056000	WASHER,FLAT,3/8",SS
9	3	061100043000	WASHER,FLAT,OS,1/4",SS
10	4	061100049000	WASHER,FLAT,OS,5/16",SS
11	3	061120043000	WASHER,LOCK,1/4",SS
12	3	061142145012	BOLT HEX .25-20 X .75 SS
13	4	061142150016	SCREW,HEX HEAD,.31-18x1.00,SS
14	4	061142157016	BOLT HEX .375-16 X 1.0 SS

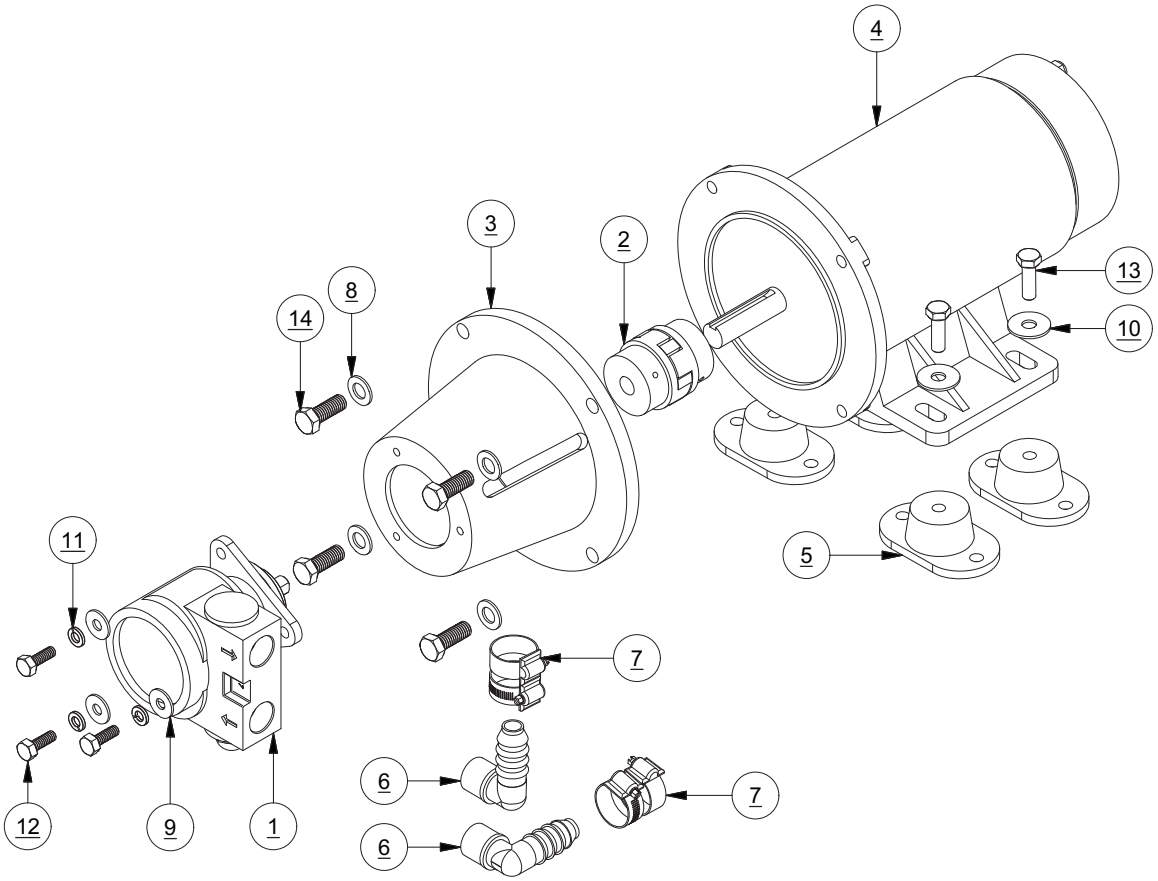

B007300025 FEED PUMP ASSY UW 600-12V

ITEM NO.	QTY.	PART NUMBER	DESCRIPTION
1	1	12176404DP	PUMP ROTARY VANE 215GPH #17
2	1	12227601DP	COUPLING PUMP-MOTOR SHAFT
3	1	12227701DP	ADAPTER PUMP ROTARY VANE
4	1	1516321100	MOTOR .5 HP DC, 12V
5	4	2115030120	RUBBER MOUNT 55 AQUA SERIES
6	2	0112022500	ELB90 .50 MNPT x .62 BARB NYLON
7	4	05181434AA	HOSE CLAMP .75 SS
8	4	061080056000	WASHER,FLAT,3/8",SS
9	3	061100043000	WASHER,FLAT,OS,1/4",SS
10	4	061100049000	WASHER,FLAT,OS,5/16",SS
11	3	061120043000	WASHER,LOCK,1/4",SS
12	3	061142145012	BOLT HEX .25-20 X .75 SS
13	4	061142150012	SCREW,HEX HEAD,.31-18x0.75,SS
14	4	061142157016	BOLT HEX .375-16 X 1.0 SS

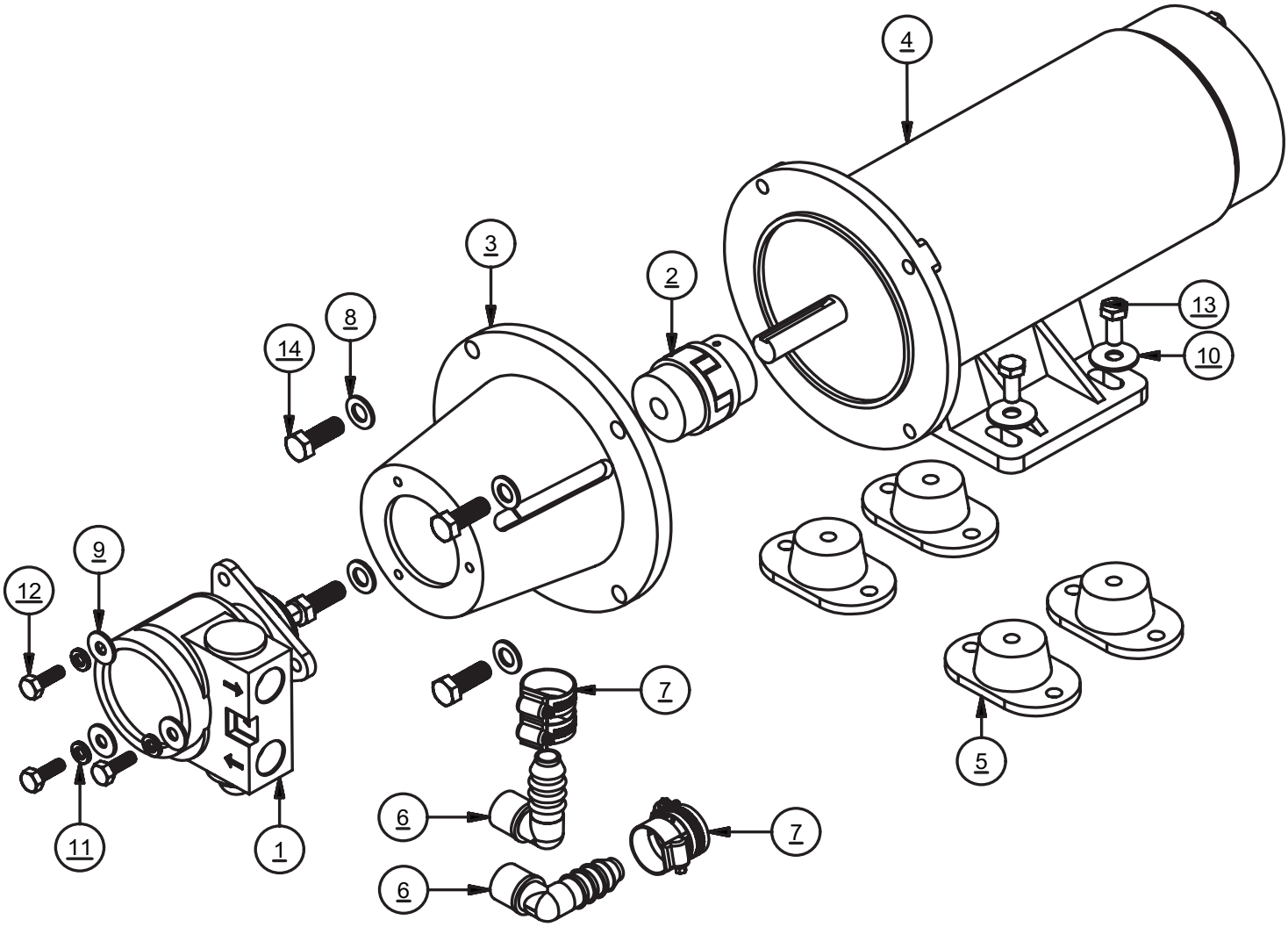

B007300023 FEED PUMP ASSY UW 400-24V

ITEM NO.	QTY.	PART NUMBER	DESCRIPTION
1	1	12176402DP	PUMP ROTARY VANE 140GPH #15
2	1	12227601DP	COUPLING PUMP-MOTOR SHAFT
3	1	12227701DP	ADAPTER PUMP ROTARY VANE
4	1	15103210CF	MOTOR .33HP 24 VDC
5	4	2115030120	RUBBER MOUNT 55 AQUA SERIES
6	2	0112022500	ELB90 .50 MNPT x .62 BARB NYLON
7	4	05181434AA	HOSE CLAMP .75 SS
8	4	061080056000	WASHER,FLAT,3/8",SS
9	3	061100043000	WASHER,FLAT,OS,1/4",SS
10	4	061100049000	WASHER,FLAT,OS,5/16",SS
11	3	061120043000	WASHER,LOCK,1/4",SS
12	3	061142145012	BOLT HEX .25-20 X .75 SS
13	4	061142150016	SCREW,HEX HEAD,.31-18x1.00,SS
14	4	061142157016	BOLT HEX .375-16 X 1.0 SS

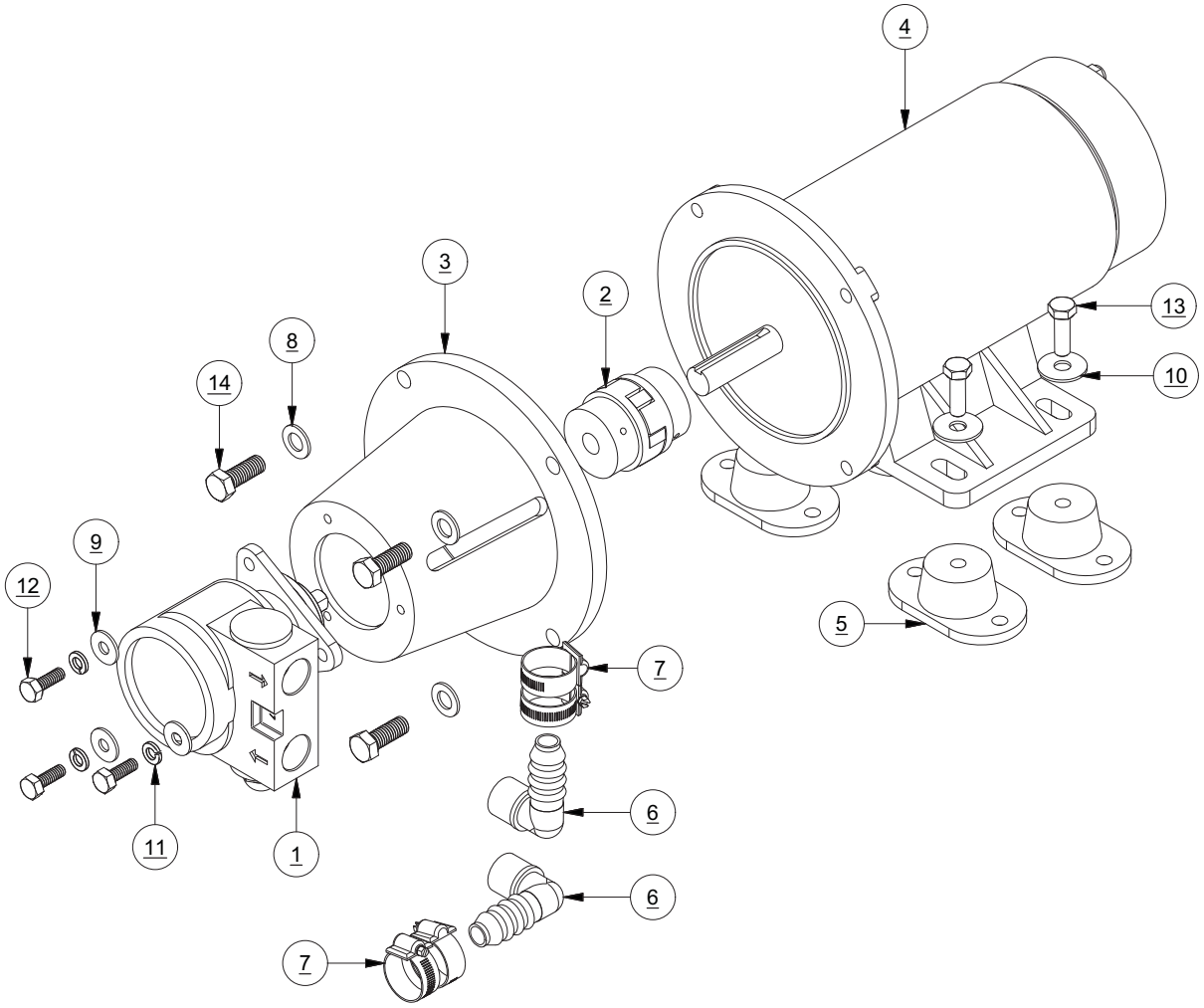

B007300026 FEED PUMP ASSY UW 600-24V

ITEM NO.	QTY.	PART NUMBER	DESCRIPTION
1	1	12176404DP	PUMP ROTARY VANE 215GPH #17
2	1	12227601DP	COUPLING PUMP-MOTOR SHAFT
3	1	12227701DP	ADAPTER PUMP ROTARY VANE
4	1	15163210CF	MOTOR .5 HP DC, 24VDC
5	4	2115030120	RUBBER MOUNT 55 AQUA SERIES
6	2	0112022500	ELB90 .50 MNPT x .62 BARB NYLON
7	4	05181434AA	HOSE CLAMP .75 SS
8	4	061080056000	WASHER,FLAT,3/8",SS
9	3	061100043000	WASHER,FLAT,OS,1/4",SS
10	4	061100049000	WASHER,FLAT,OS,5/16",SS
11	3	061120043000	WASHER,LOCK,1/4",SS
12	3	061142145012	BOLT HEX .25-20 X .75 SS
13	4	061142150016	SCREW,HEX HEAD,.31-18x1.00,SS
14	4	061142157016	BOLT HEX .375-16 X 1.0 SS

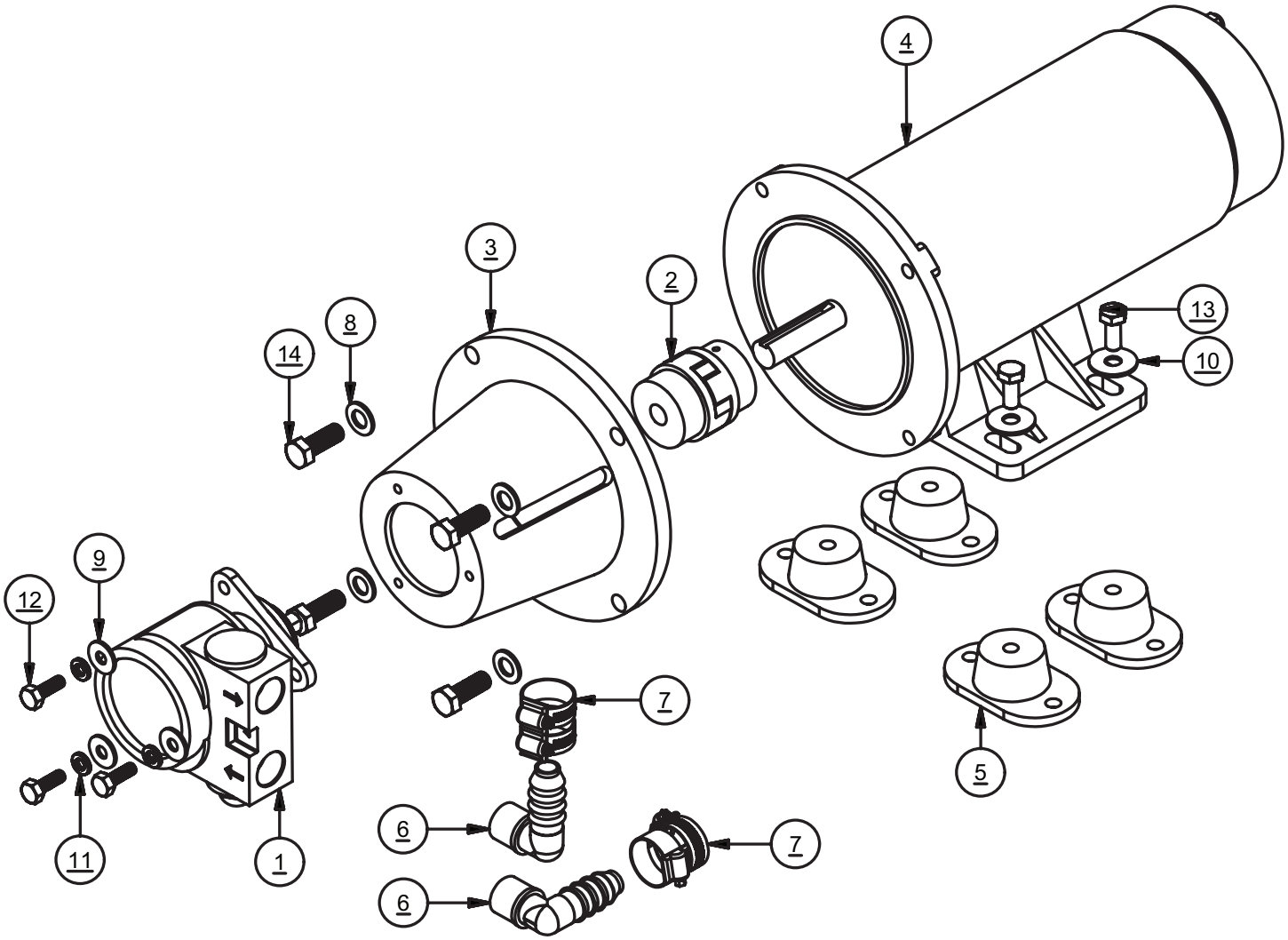

B007300024 FEED PUMP ASSY UW 400-115-230VAC

ITEM NO.	QTY.	PART NUMBER	DESCRIPTION
1	1	12176402DP	PUMP ROTARY VANE 140GPH #15
2	1	12227601DP	COUPLING PUMP-MOTOR SHAFT
3	1	12227701DP	ADAPTER PUMP ROTARY VANE
4	1	15AG250912	MOTOR .33 HP 50-60-1
5	4	2115030120	RUBBER MOUNT 55 AQUA SERIES
6	2	0112022500	ELB90 .50 MNPT x .62 BARB NYLON
7	4	05181434AA	HOSE CLAMP .75 SS
8	4	061080056000	WASHER,FLAT,3/8",SS
9	3	061100043000	WASHER,FLAT,OS,1/4",SS
10	4	061100049000	WASHER,FLAT,OS,5/16",SS
11	3	061120043000	WASHER,LOCK,1/4",SS
12	3	061142145012	BOLT HEX .25-20 X .75 SS
13	4	061142150012	SCREW,HEX HEAD,.31-18x0.75,SS
14	4	061142157016	BOLT HEX .375-16 X 1.0 SS

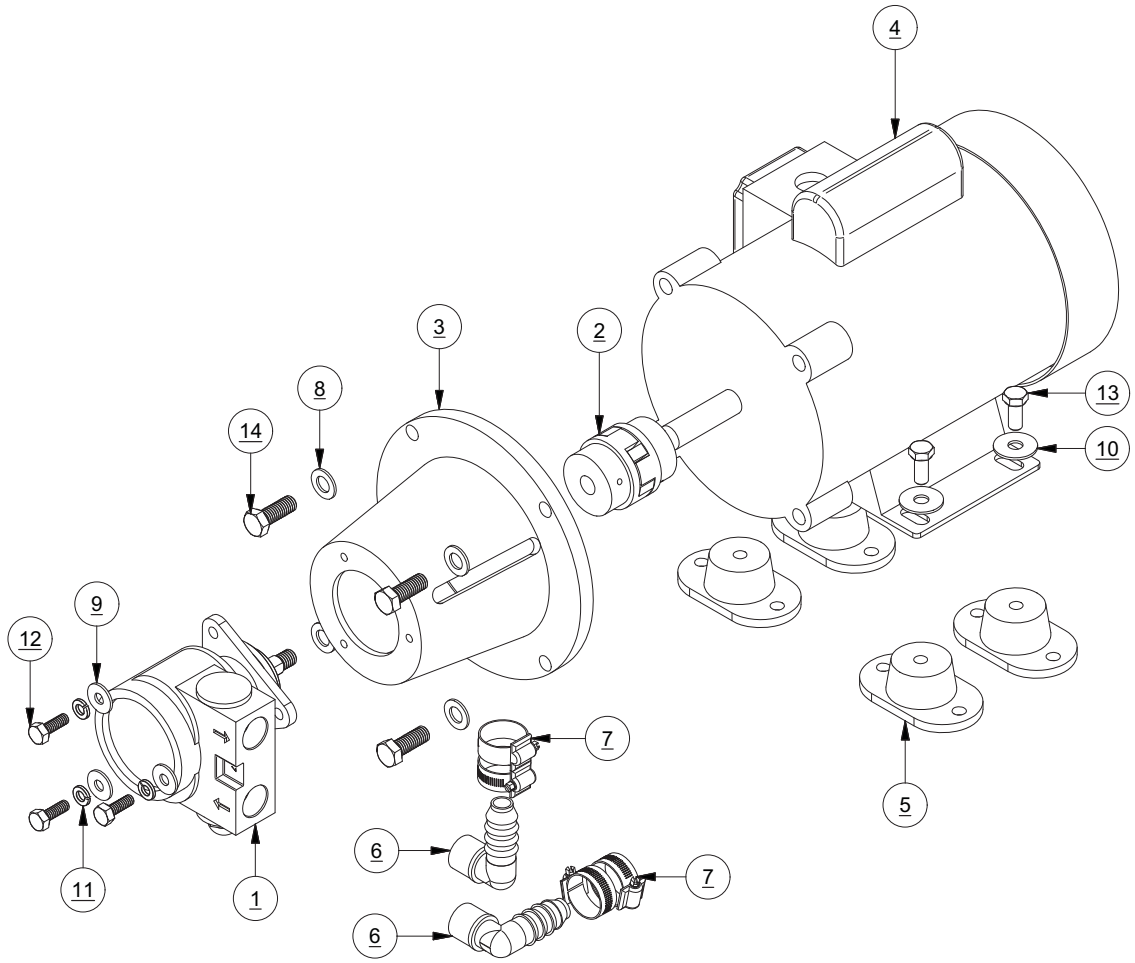

B007300027 FEED PUMP ASSY UW 600-115-230VAC

ITEM NO.	QTY.	PART NUMBER	DESCRIPTION
1	1	12176404DP	PUMP ROTARY VANE 215GPH #17
2	1	12227601DP	COUPLING PUMP-MOTOR SHAFT
3	1	12227701DP	ADAPTER PUMP ROTARY VANE
4	1	1519071010	MOTOR 1-2 HP 115-230 56C-1725
5	4	2115030120	RUBBER MOUNT 55 AQUA SERIES
6	2	0112022500	ELB90 .50 MNPT x .62 BARB NYLON
7	4	05181434AA	HOSE CLAMP .75 SS
8	4	061080056000	WASHER,FLAT,3/8",SS
9	3	061100043000	WASHER,FLAT,OS,1/4",SS
10	4	061100049000	WASHER,FLAT,OS,5/16",SS
11	3	061120043000	WASHER,LOCK,1/4",SS
12	3	061142145012	BOLT HEX .25-20 X .75 SS
13	4	061142150012	SCREW,HEX HEAD,.31-18x0.75,SS
14	4	061142157016	BOLT HEX .375-16 X 1.0 SS

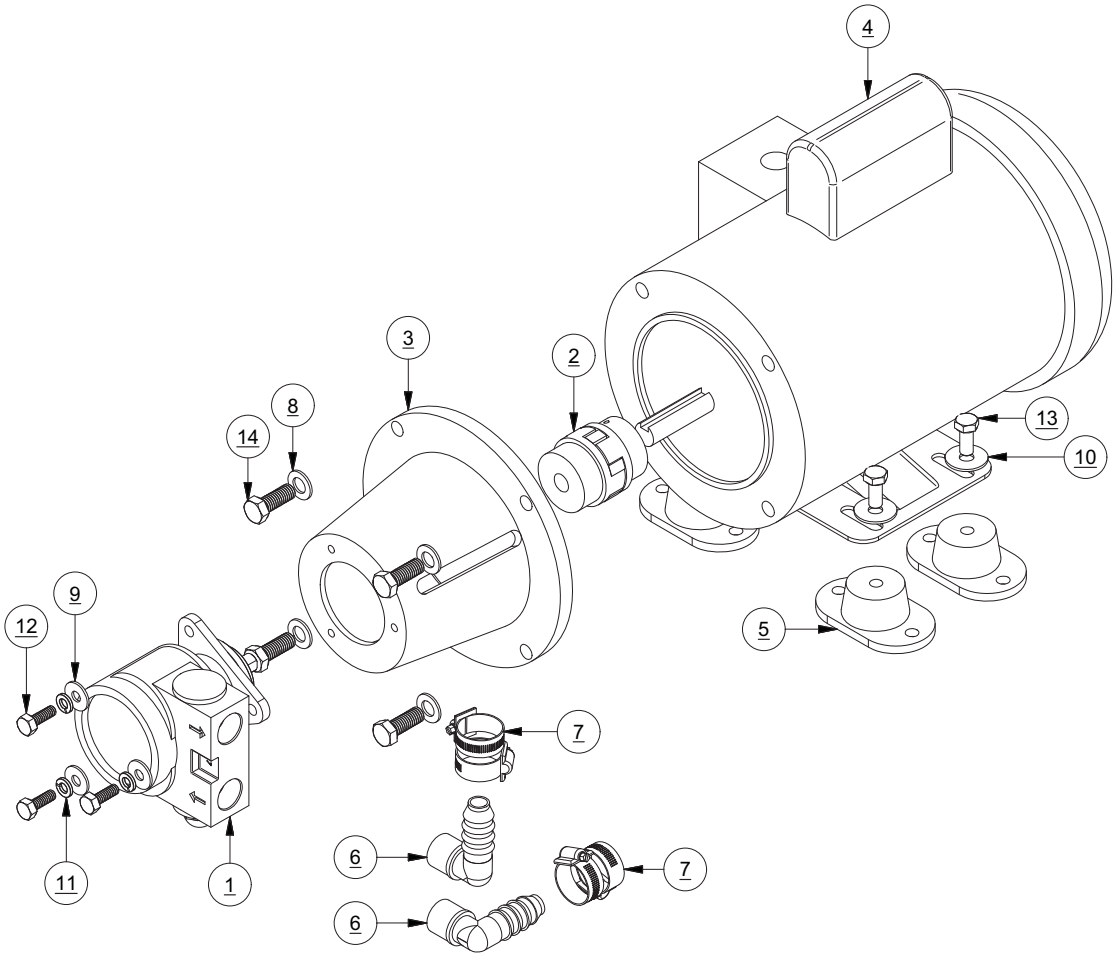

B008220001 PLANKTON FILTER ASSY UW-SE

ITEM NO.	QTY.	PART NUMBER	DESCRIPTION
1	1	07650209ST	FILTER HOUSING-LID AQUA ER
2	1	2020043810	BRACKET PLANKTON FILTER AQUA ER
3	1	0805823578	ELEMENT PLANKTON
4	2	0101072583	ELB90 0.50 MPT x 0.50 BARB
5	4	061172143016	SCREX,HEX A,.25x1.00,SS
6	4	05181434AA	HOSE CLAMP .75 SS
7	4	061170628016	SC PHIL PAN A #10 X 1 SS
8	4	065080028000	WASHER FLAT #10 NYLON
9	4	061080028000	WASHER FLAT #10 SS

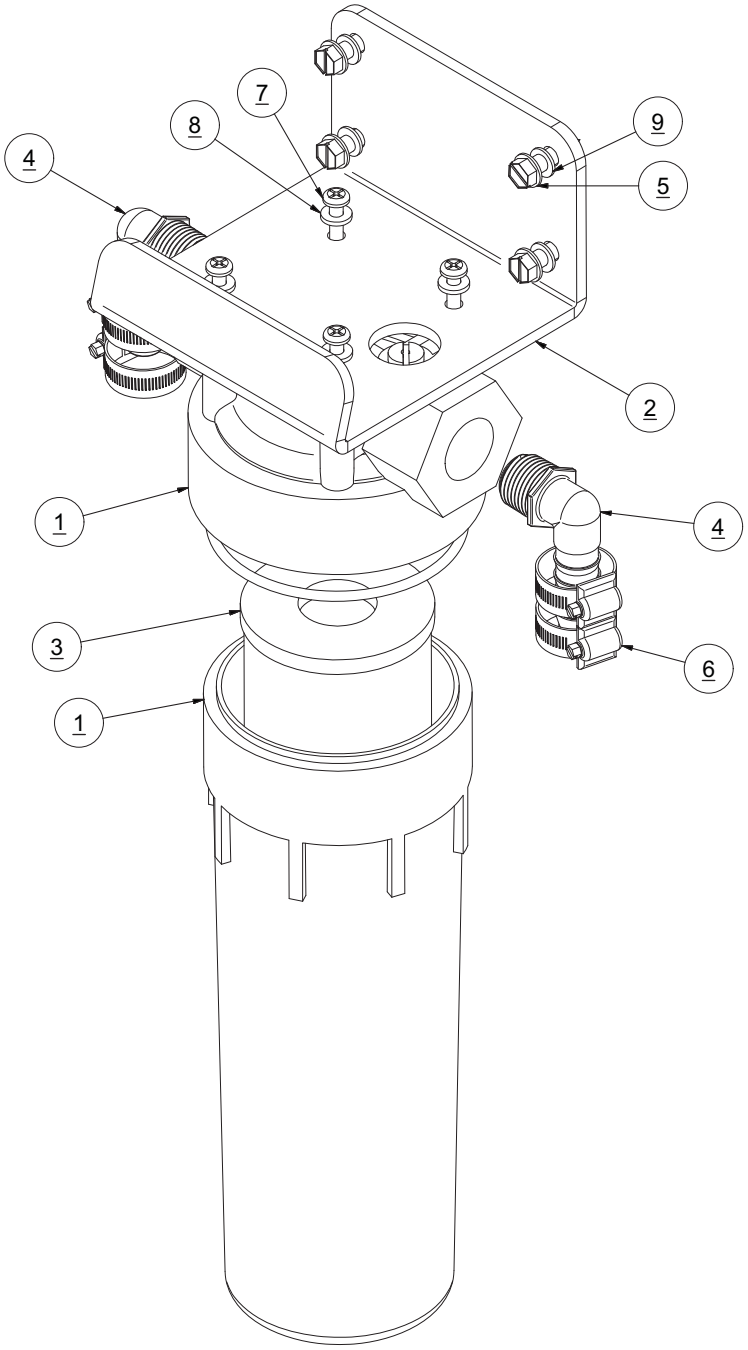
7
8
9
4
5
2
1
4
3
6
1

0821003 PROD-BRINE, MANIF ASSY, UWIII

ITEM NO.	QTY.	PART NUMBER	DESCRIPTION
1	1	07650209ST	FILTER HOUSING-LID AQUA ER
2	1	11012061	BRACKET,MTG,FILTR ASSY,UW3M,AL
3	1	14012030	ORIFICE, ADAP, 0.5MTX0.25FT, ACETAL
4	1	0713020573	FILTER HOUSING-LID .375 X 10 ASM
5	1	0803004773	CHARCOAL FILTER 10IN
6	1	07650211ST	HOUSING MODI, AIR-OIL, HP, 2.5X5, 0.5 FNPT
7	1	1401095998	SOLENOID VALVE EXTERNAL PORT
8	1	3131680298	PLUG CONNECTOR DIN 3-PIN
9	1	33-0117	FILTER, 5 MIC, 10 SQ FT, 2.5" H 9.75"
10	1	0101293483	RB 0.75 MT x 0.25 FT
11	1	0101340883	PLUG 0.25 MT
12	1	01013708CL	NIPPLE 0.25 NPT x CL
13	1	01013725CL	NIPPLE 0.50 NPT x CL
14	2	0112022500	ELB90 .50 MNPT x .62 BARB NYLON
15	1	01122923DG	RB 0.50 MPT x 0.25 FT NYL
16	1	01124225DG	TEE 0.50 FT x FT x FT NYL
17	1	0204011769	ELBOW,PP,3/8 ODx1/4 FT
18	2	0204021769	ELBOW,PP,3-8 ODx1-4 MT
19	1	0204021769	FITTING,PP,3-8 ODx1-4 MT
20	1	0204021869	ELBOW,PP,3/8 ODx3/8 MT
21	1	0204091869	FITTING,PP,3/8 ODx3/8 MT
22	1	14172105AT	VALVE CHECK .25 MPT SS
23	1	30-0062	NIPPLE, NYL, 1/2" NPT X CLOSE
24	2	30-0408	PLUG,NYL,0.25 MNPT,HXHD,NYL
25	1	30-1570	TEE, NYL, 1/4" FNPT
26	2 FT	0312123569	TUBE 3/8 BLK NYL
27	4	05181434AA	CLAMP,HOSE,SS,3/4"
28	4	061080028000	WASHER FLAT #10 SS
29	4	061142145010	BOLT HEX .25-20 X .625 SS
30	4	061161630008	SC PHIL FLAT 10-24 X 1-2 SS
31	12	16012029	SCREW, FLTHD, PHIL, SELF-THRD, #10, .75, 316SS

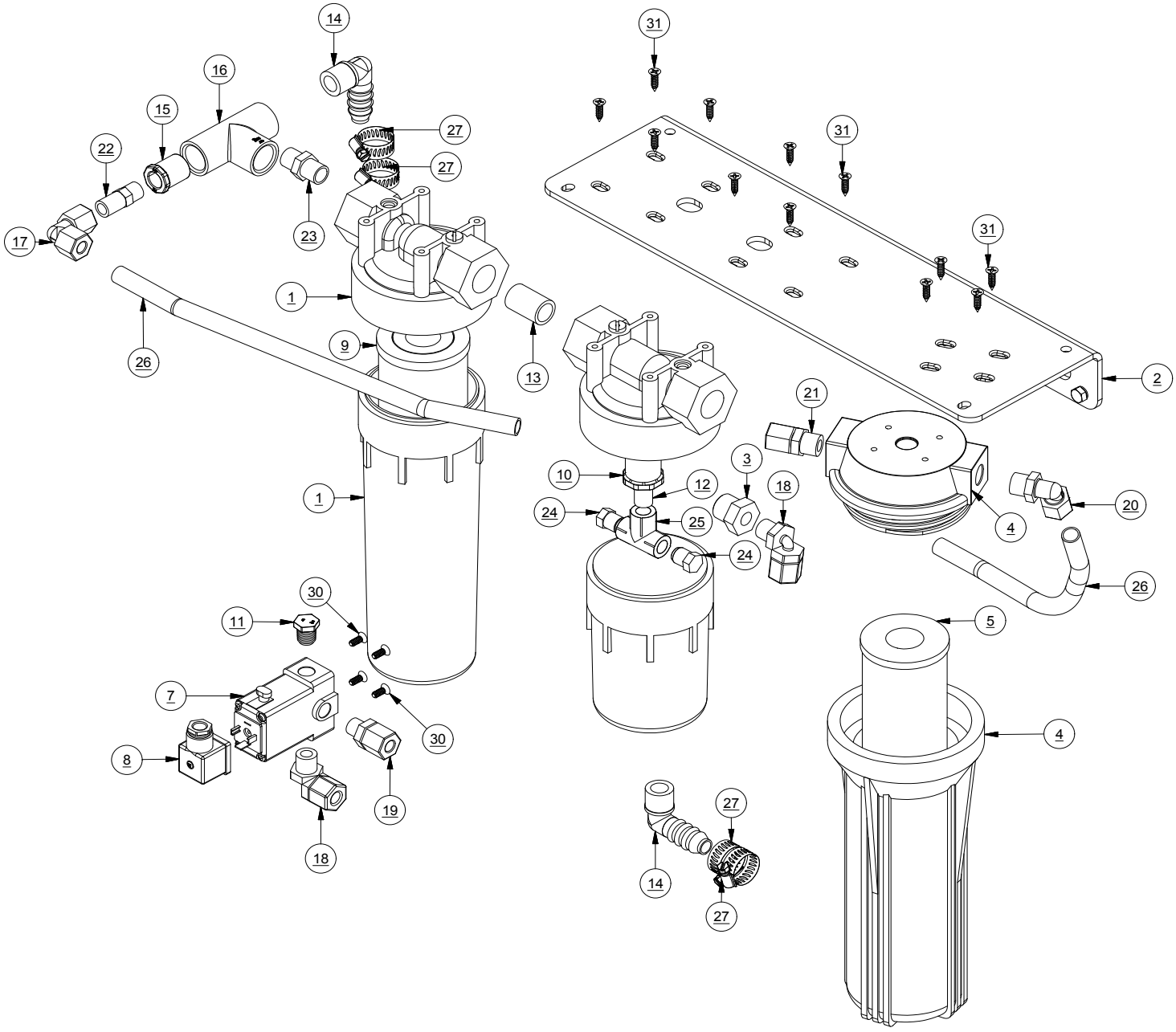

SPARE PARTS	
PART NUMBER	DESCRIPTION
14012030	ORIFICE, ADAP, 0.5MTX0.25FT, ACETAL
33-0117	FILTER, 5 MIC, 10 SQ FT, 2.5" H 9.75"
0803004473	ELEMENT CARBON BRIQUETTE 5.0 IN
2614010473	ORING BLUE HSG

0561009 PUMP, RO BOOST, ASSY, UWIII

ITEM NO.	QTY.	PART NUMBER	DESCRIPTION
1	1	12181301DS	ETD PUMP-NEW
2	1	2317100300	TRANSDUCER 0-2000 PSI .437 SAE
3	1	0112022500	ELB90 .50 MNPT x .62 BARB NYLON
4	1	0117492569	TEE ST .50 FT X .50 MT X .50 FT SS
5	1	0117630800	ADAPTER, .4375 FPT X .25 MPT
6	1	0204022569	ELBOW,PP,1/2 ODx1/2 MT
7	1	02170910PH	CONN 0.25 TUBE x 0.50 MT SS316
8	2	1317061900	ELB45-6 FLARE X 3-8 MT SS
9	4	061142157012	SCREW,HEX HEAD,.38-16x0.75,SS

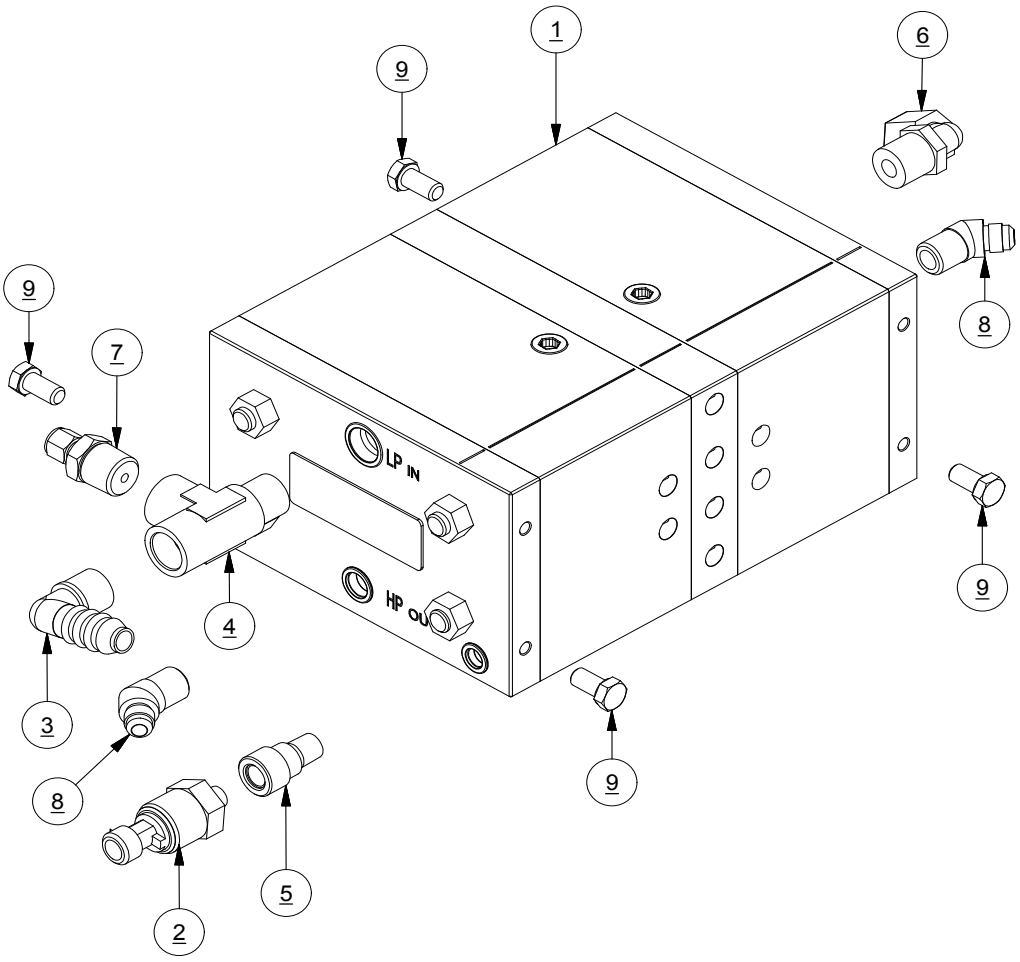

0561015 PUMP, RO BOOST, MOD, ASSY, UWIII

ITEM NO.	QTY.	PART NUMBER	DESCRIPTION
1	4	20200404011	BRACKET L MOUNTING FEET-WHITE POWDER COAT
2	1	12181301DS	ETD PUMP-NEW
3	4	2115030120	RUBBER MOUNT 55 AQUA SERIES
4	1	2317100300	TRANSDUCER 0-2000 PSI .437 SAE
5	1	0112022500	ELB90 .50 MNPT x .62 BARB NYLON
6	1	0117492569	TEE ST .50 FT X .50 MT X .50 FT SS
7	1	0117630800	ADAPTER, .4375 FPT X .25 MPT
8	1	0204022569	ELBOW,PP,1/2 ODx1/2 MT
9	1	02170910PH	CONN 0.25 TUBE x 0.50 MT SS316
10	2	1317061900	ELB45-6 FLARE X 3-8 MT SS
11	8	061142157012	SCREW,HEX HEAD,.38-16x0.75,SS

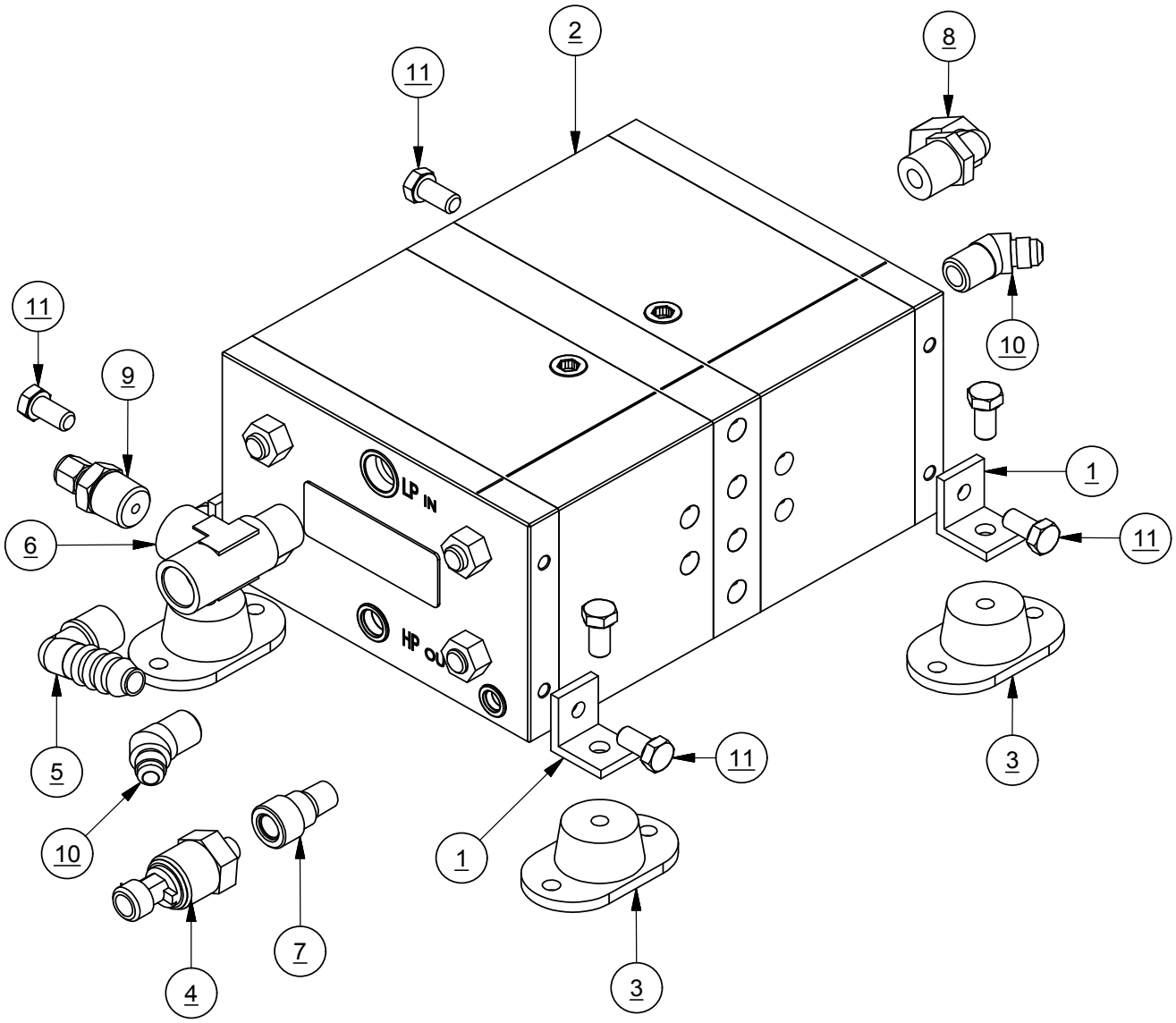

MEMBRANE VESSEL 400 - 600 GPD COMPACT

ITEM NO.	QTY.	PART NUMBER	DESCRIPTION
1	2	0520210600	RETAINER PORT MVA
2	2	05202401GR	BRACKET,MVA U-CLAMP,3 IN
3	1	2453502400	END PLUG SINGLE 3 AW
6	1	2453512400	END PLUG DUAL 3 IN AW
7	2	2615180100	FELT ADHESIVE 0.125 X 0.75 STRIP
8	1	0101370815	NIPPLE 0.25 NPT x 1.50
9	2	0117410800	NIPPLE HP MVA AW
10	1	0204010869	ELB90 .25 TUBE x .25 FNPT PLASTIC
11	2	1317011769	ELB90 6 FLARE X .25 FPT SS
12	2	2614010100	O-RING 116 PRODUCT AS-AW
13	4	2614014900	O-RING 230 BRINE 3.0 END PLUG
14	4	061080028000	WASHER FLAT #10 SS
15	4	061142145012	BOLT HEX .25-20 X .75 SS
16	6	061162345012	SC SOC CAP .25-20 X .75 SS
17	4	20201030000	SEGMENT RING AW (SET)
18	4	2614017900	O-RING 115 INTERCONNECT AW
19	1	2213017063	LABEL INLET (WHITE BACKGROUND)
20	1	2213017163	LABEL OUTLET (WHITE BACKGROUND)

B196300002 MEMBRANE VESSEL ASSY 400 GPD

ITEM NO.	QTY.	PART NUMBER	DESCRIPTION
4	1	2408132500-02	VESSEL HIGH PRESSURE 900GPD
5	1	2724011433	MEMBRANE 900 GPD AW W-SEAL

B196380009 MEMBRANE VESSEL ASSY 600 UWC

ITEM NO.	QTY.	PART NUMBER	DESCRIPTION
4	1	2408132500-02	VESSEL HIGH PRESSURE 900GPD
5	1	2724011433	MEMBRANE 900 GPD AW W-SEAL

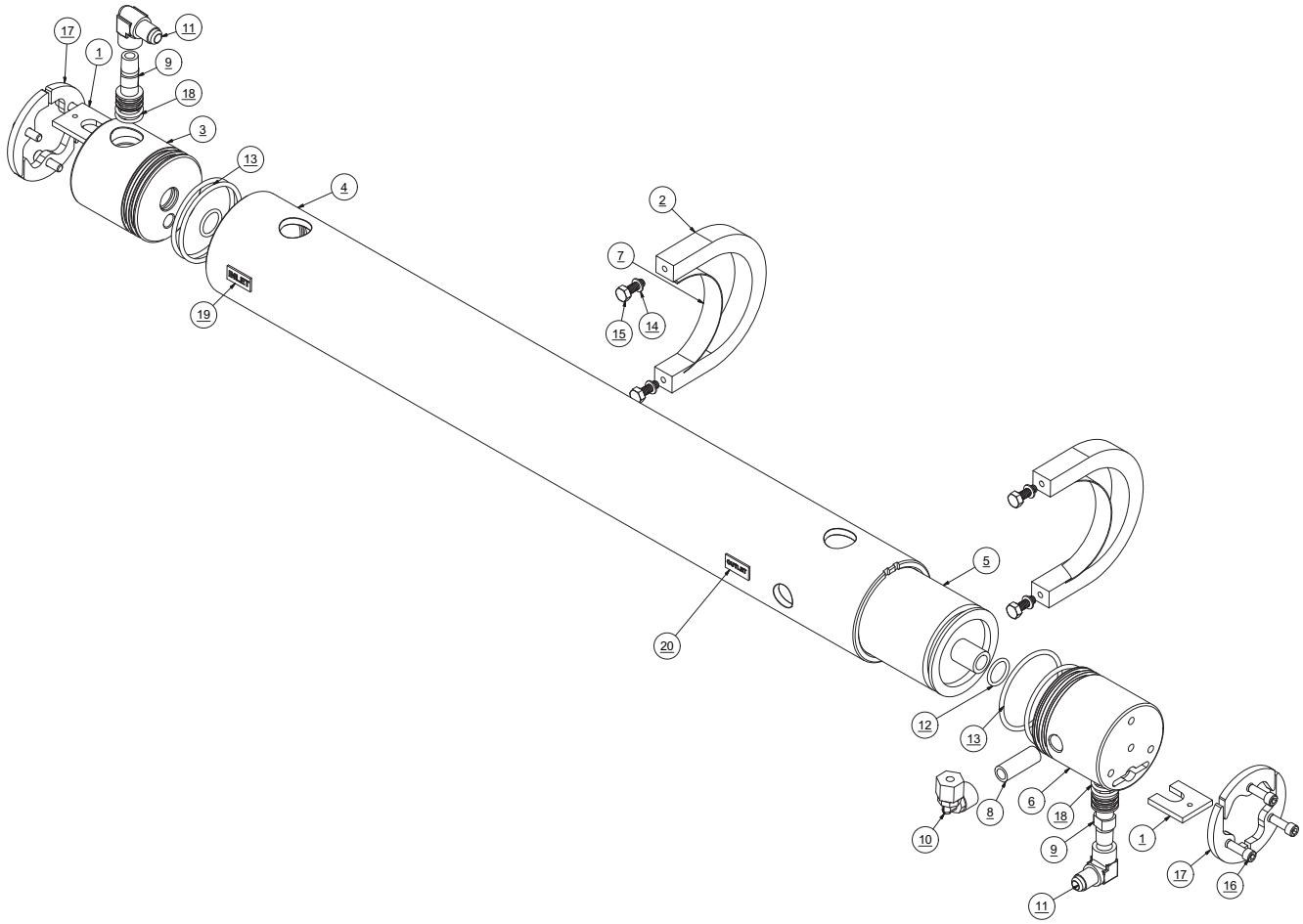
17
1
11
9
18
3
13
4
2
7
15
14
19
5
20
12
13
6
18
8
10
9
1
17
16
11

B196120015 MEMBRANE VESSEL ASSY 600-2

ITEM NO.	QTY.	PART NUMBER	DESCRIPTION
1	4	05202401GR	BRACKET,MVA U-CLAMP,3 IN
2	2	2453502400	END PLUG SINGLE 3 AW
3	1	2417430800	INTERCONNECT MVA SS
4	2	0520051800-1	MVA RACK , UWDX BJ
5	4	0520210600	RETAINER PORT MVA
6	2	2408132500	VESSEL HIGH PRESSURE 450GPD
7	2	2724011233	MEMBRANE 450GPD AW W-SEAL
8	4	2615180100	FELT ADHESIVE 0.125 X 0.75 STRIP
9	2	2453512400	END PLUG DUAL 3 in
10	1	0204741800	UNION TEE,PP,.375 X .375 X .375 DIV
11	2	0204010869	ELBOW,PP,1/4 ODx1/4 FT
12	2	1317011769	ELB90 -6 FLARE X .25 FPT SS
13	2	0101370815	NIPPLE 0.25 NPT x 1.50
14	2	0117410800	NIPPLE HP MVA AW
15	4	2614010100	O-RING 116 PRODUCT AS-AW
16	8	2614014900	O-RING 230 BRINE 3.0 END PLUG
17	4	061172143016	SCREX,HEX A,.25x1.00,SS
18	8	2614017900	O-RING 115 INTERCONNECT AW
19	8	061161845012	SC ALLEN FLAT .25-20 X .75 SS
20	12	061162345012	SC SOC CAP .25-20 X .75 SS
21	4	20201030000	SEGMENT RING AW (SET)
22	4	061080028000	WASHER FLAT #10 SS
23	2	2213017063	LABEL INLET (WHITE BACKGROUND)
24	2	2213017163	LABEL OUTLET (WHITE BACKGROUND)

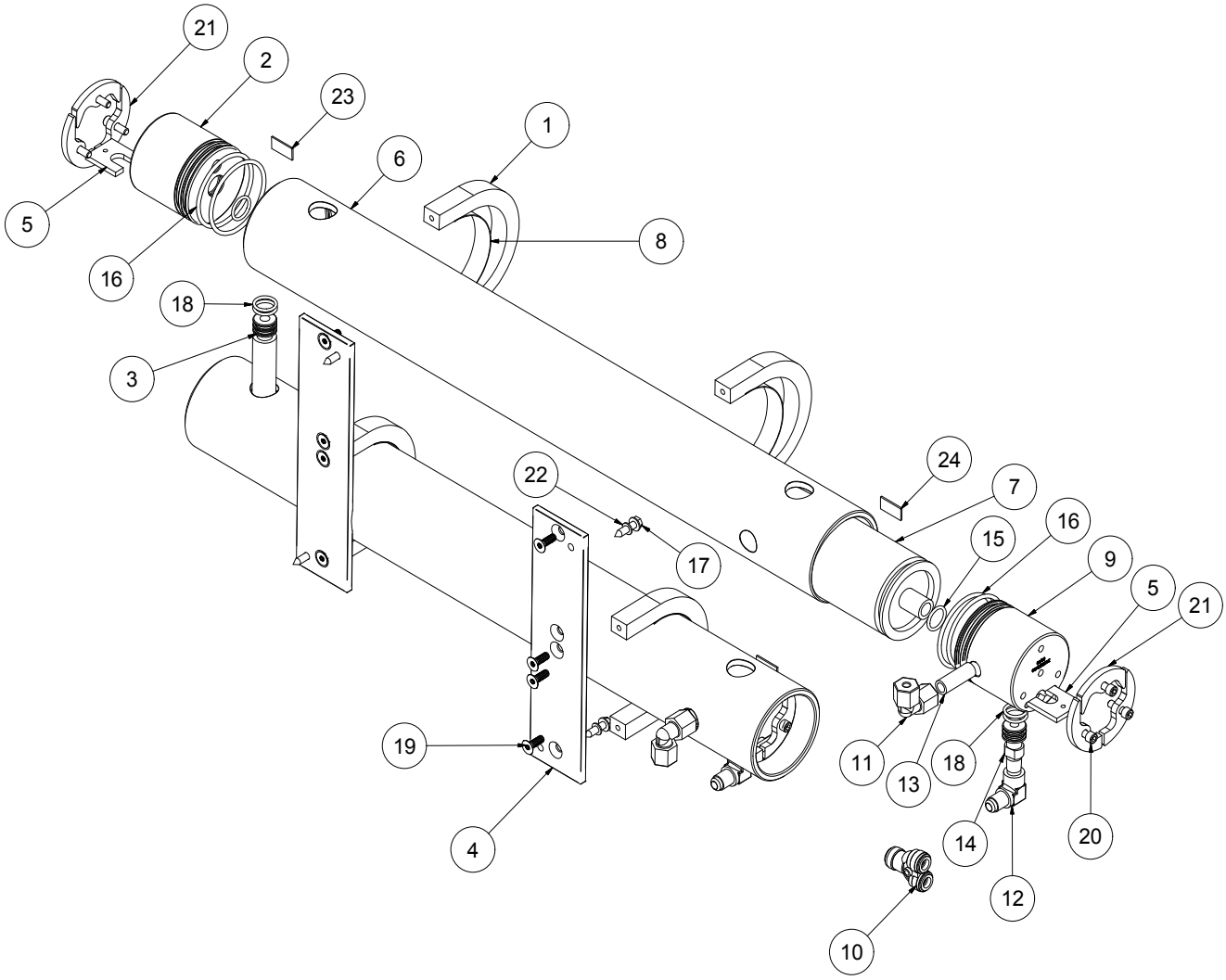
21
2
23
1
6
5
8
16
18
3
24
22
7
16
15
9
17
5
21
19
11
13
18
4
14
20
12
10

MEMBRANE VESSEL 400 - 600 GPD MODULAR

ITEM NO.	QTY.	PART NUMBER	DESCRIPTION
1	2	0520051900	MVA RACK UW-SE
2	2	0520210600	RETAINER PORT MVA
3	2	05202401GR	BRACKET,MVA U-CLAMP,3 IN
4	1	2453502400	END PLUG SINGLE 3 AW
7	1	2453512400	END PLUG DUAL 3 IN AW
8	2	2615180100	FELT ADHESIVE 0.125 X 0.75 STRIP
9	1	0101370815	NIPPLE 0.25 NPT x 1.50
10	2	0117410800	NIPPLE HP MVA AW
11	1	0204010869	ELB90 .25 TUBE x .25 FNPT PLASTIC
12	4	061172143016	SCREX,HEX A,.25x1.00,SS
13	2	1317011769	ELB90 6 FLARE X .25 FPT SS
14	2	2614010100	O-RING 116 PRODUCT AS-AW
15	4	2614014900	O-RING 230 BRINE 3.0 END PLUG
16	4	061080028000	WASHER FLAT #10 SS
17	4	061161845012	SC ALLEN FLAT .25-20 X .75 SS
18	6	061162345012	SC SOC CAP .25-20 X .75 SS
19	4	20201030000	SEGMENT RING AW (SET)
20	4	2614017900	O-RING 115 INTERCONNECT AW
21	1	2213017063	LABEL INLET (WHITE BACKGROUND)
22	1	2213017163	LABEL OUTLET (WHITE BACKGROUND)

B1963 MEMBRANE VESSEL ASSY 0 GPD

ITEM NO.	QTY.	PART NUMBER	DESCRIPTION
5	1	2724011433	MEMBRANE 900 GPD AW W-SEAL
6	1	2408132500-02	VESSEL HIGH PRESSURE 900GPD

B196380003 MEMBRANE VESSEL ASSY 600 UWM

ITEM NO.	QTY.	PART NUMBER	DESCRIPTION
5	1	2724011433	MEMBRANE 900 GPD AW W-SEAL
6	1	2408132500-02	VESSEL HIGH PRESSURE 900GPD

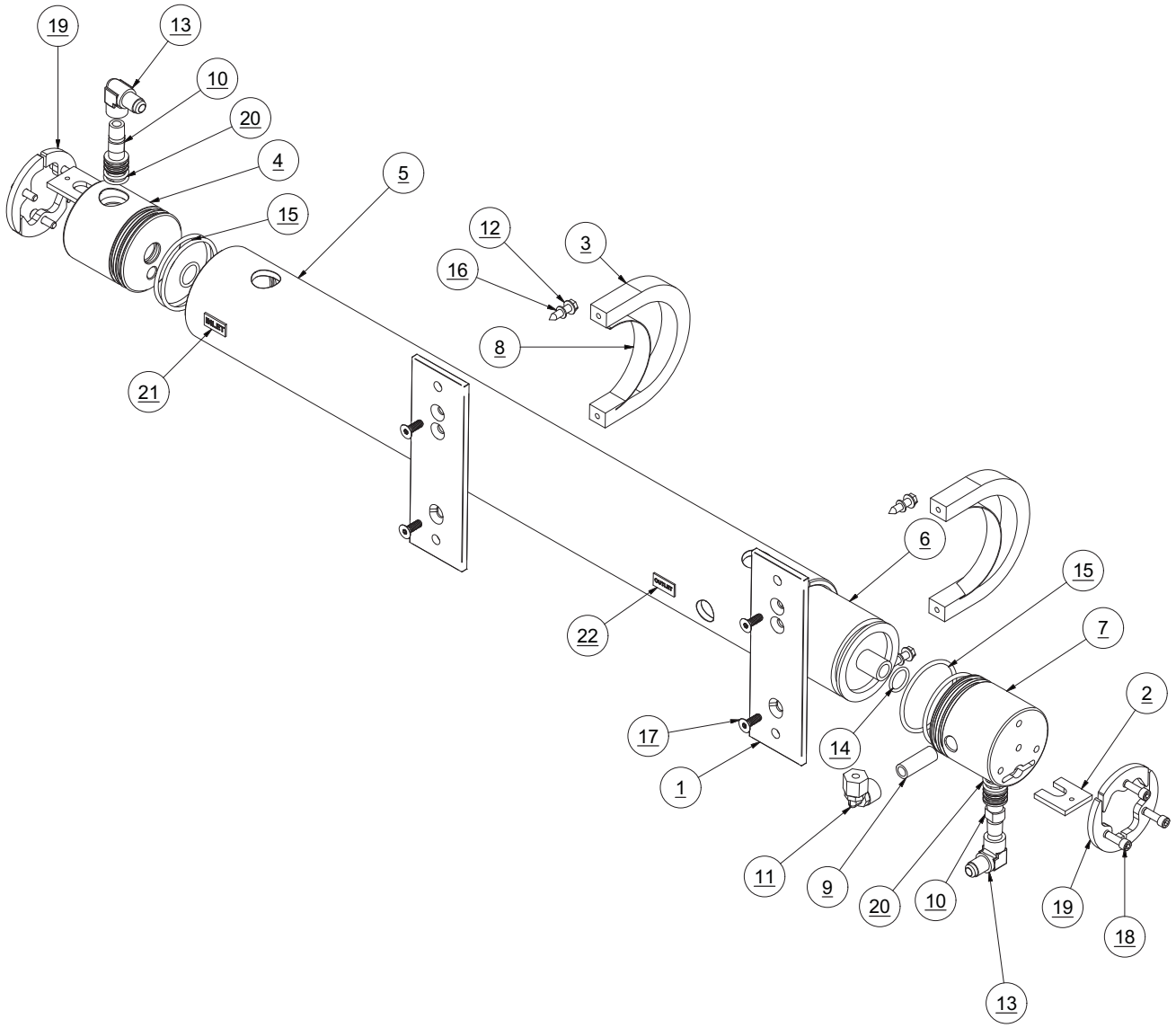
19
13
10
20
4
5
15
12
3
16
8
21
6
15
7
22
2
17
14
1
11
9
20
10
19
18
13

HP HOSE ASSEMBLY

ITEM NO.	QTY.	PART NUMBER	DESCRIPTION
1	1	2432160669	HOSE HP - 6P
2	2	1317481969	SWIVEL FITTING - 6 SSP

SPECIFY PART NUMBER AND DESCRIPTION OF SPECIFIC HIGH PRESSURE HOSE ASSEMBLY
OR IF A SPECIAL LENGTH IS REQUIRED, SPECIFY MEASURED OVERALL LENGTH: FITTING TO FITTING

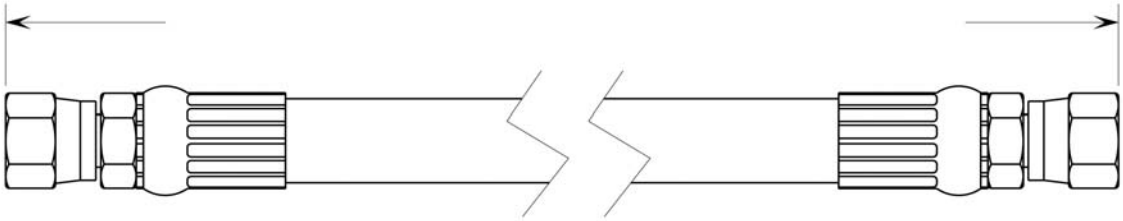

OVERALL LENGTH IS + / - 1/4" (6mm)

0821003 PROD-BRINE, MANIF ASSY, UWIII

ITEM NO.	QTY.	PART NUMBER	DESCRIPTION
1	1	P502300003	MANIFOLD,FEED PRESSURE ASSY UW
2	1	14012006	MANIFOLD, PROB, PVC, PRESS, LOW, 6X1.5X2
3	1	5301181100	MANIF,FLOW METER,PVC
4	1	5360300800	MANIFOLD,BRINE FLOW,PVC,PRESS,LOW,1.5X1.5X4.0
5	2	0204011869	ELBOW,PP,3/8 ODx3/8 FT
6	1	11026520AO	Turbo-Flowmeter
7	1	11026920AO	FLOWMETER IN-LINE .53-7.9GPM
8	1	1401096100	VALVE SOLENOID 12VDC
9	1	3131680298	PLUG CONNECTOR DIN 3-PIN
10	1	B511080004	SALINITY PROBE ASSY
11	1	0204021769	FITTING,PP,3-8 ODx1-4 MT
12	5	0204021869	ELBOW,PP,3/8 ODx3/8 MT
13	1	0204022469	ELBOW,PP,1/2 ODx3/8 MT
14	1	0117341869	PLUG .375 MNPT SS
15	2	061060045000	NUT HEX .25-20 W-INSERT SS
16	4	061161130010	SC PHIL OVAL #10-24x5-8L SS
17	2	061161845040	SCREW,FL HD,SOC,SS,1/4-20x2-1/2"
18	1 FT	0312123569	TUBE3/8BLACK

SPARE PARTS	
PART NUMBER	DESCRIPTION
2317100200	TRANSDUCER 0-200 PSI .437 SAE
2614015800	ORING GAUGE/PRES SWITCH 011
B511080004	SALINITY PROBE ASSY
11026520AO	PRODUCT FLOWMETER
11026920AO	BRINE FLOWMETER

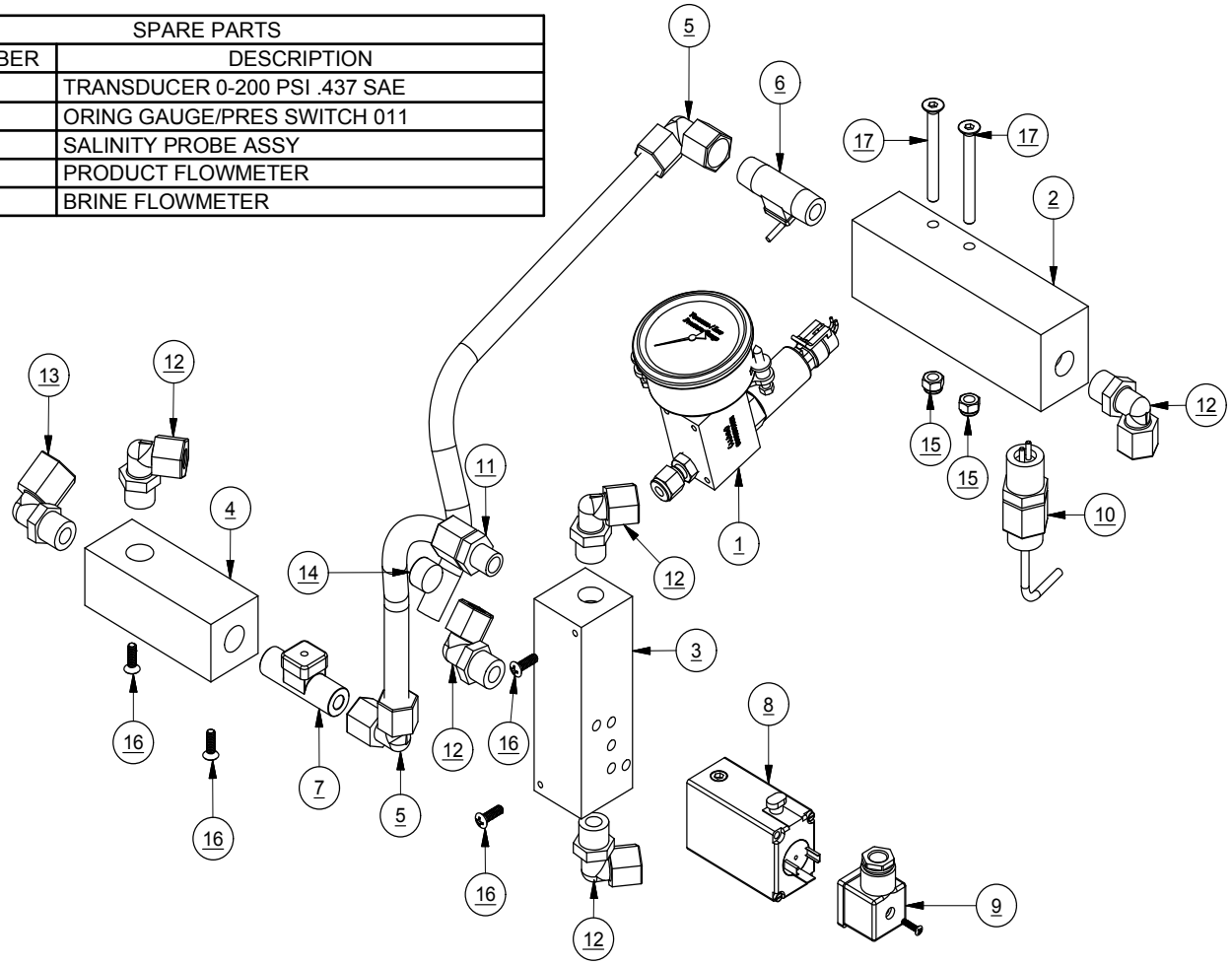

1401096100 3-WAY PRODUCT WATER DIVERSION SOLENOID VALVE

PORT DESIGNATION & DESCRIPTION (WATER FLOW)

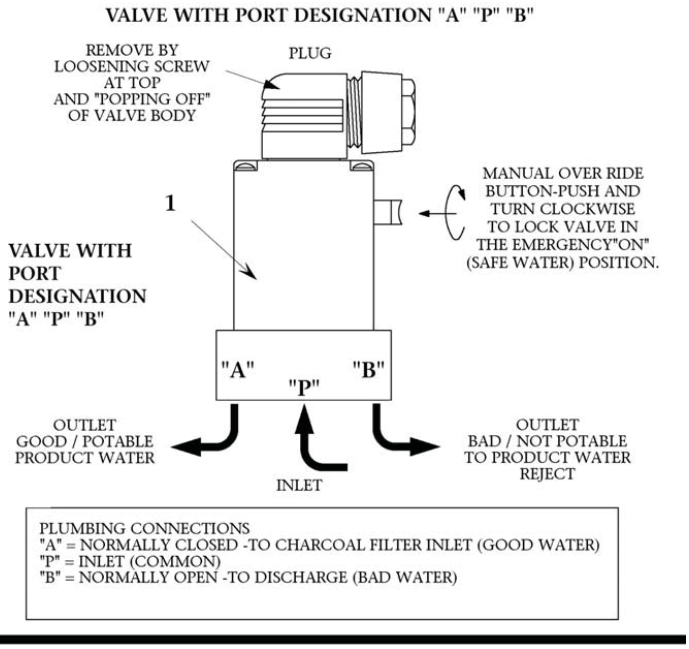

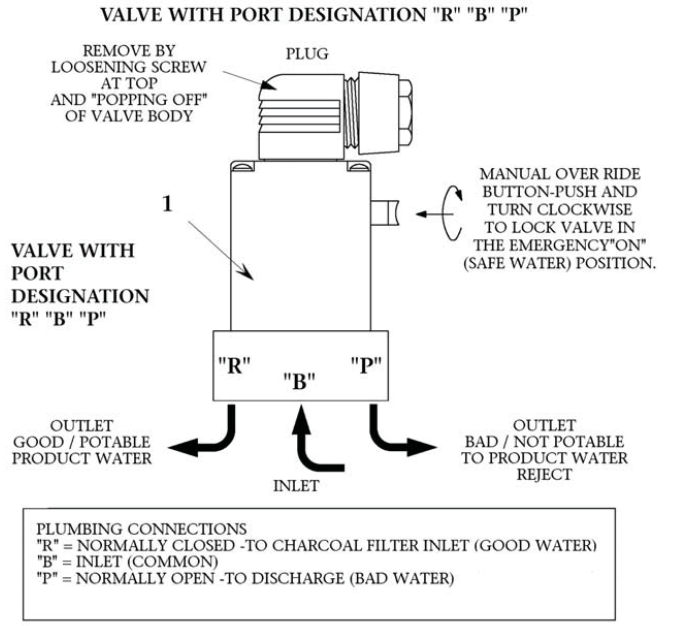

B521220002 CHARCOAL FILTER ASSY 170-350-UW

ITEM NO.	QTY.	PART NUMBER	DESCRIPTION
1	1	20200402102	BRACKET SINGLE FILTER
2	1	0713020573	FILTER HOUSING-LID .375 X 10 ASM
3	1	0803004773	ELEMENT CHARCOAL 10.0
4	1	01100719FX	ELB9 0.375MPT X 0.50 BARBTEFBLU
5	2	0204020969	ELB90 .25 TUBE x .375 MPT PLASTIC
6	2	0204021869	ELBOW,SS,3/8 ODx3/8 MT
7	4	061170628016	SC PHIL PAN A #10 X 1 SS
8	4	061170628020	SC PHIL PAN A #10 X 1.25 SS
9	8	065080028000	WASHER FLAT #10 NYLON
10	1	2234018100	LABEL, CHARCOAL(BLUE ON WHITE)

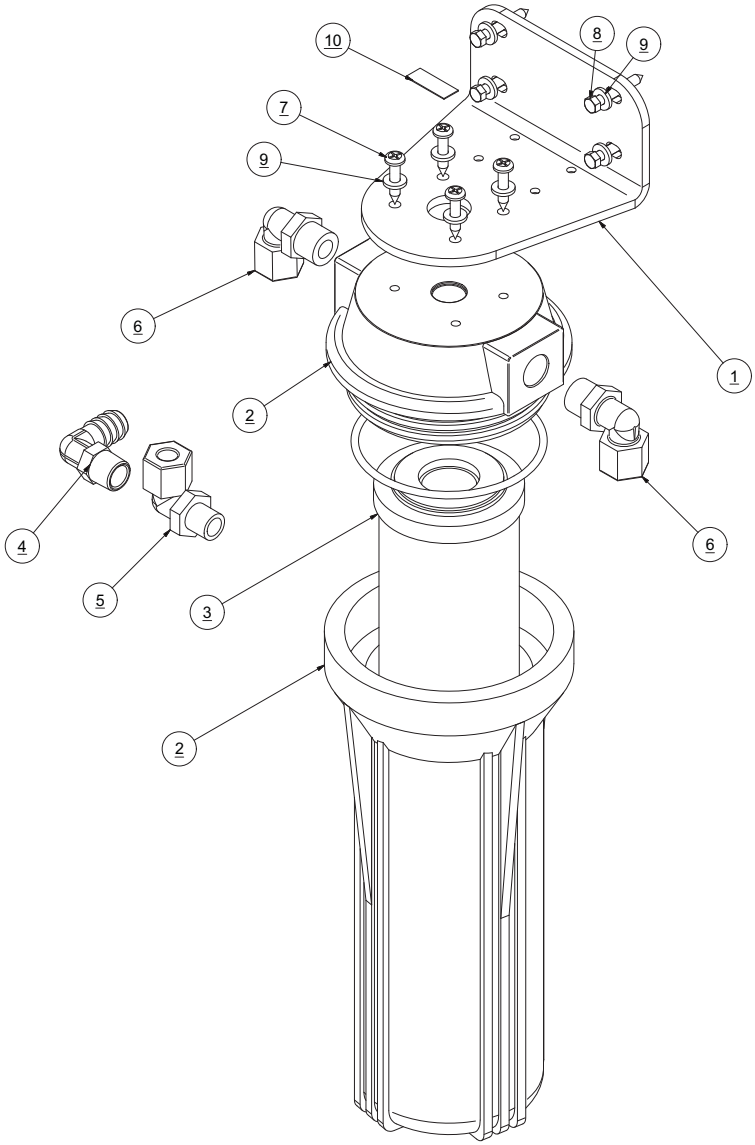

B561080001 PH NEUTRALIZER ASSY 0.5-1.5 GPM

ITEM NO.	QTY.	PART NUMBER	DESCRIPTION
1	1	20200402102	BRACKET SINGLE FILTER
2	1	0713020573	FILTER HOUSING-LID .375 X 10 ASM
3	1	08251950AS	ELEMENT POST FILTER PH 9.75 IN
4	2	0204020969	ELB90 .25 TUBE x .375 MPT PLASTIC
5	2	0204021869	ELBOW,SS,3/8 ODx3/8 MT
6	4	061172143016	SCREX,HEX A,.25x1.00,SS
7	4	061100043000	WASHER,FLAT,OS,1/4",SS
8	4	061170628016	SC PHIL PAN A #10 X 1 SS
9	1	065080028000	WASHER FLAT #10 NYLON
10	1	2224018760	LABEL,PH NEUTRALIZER

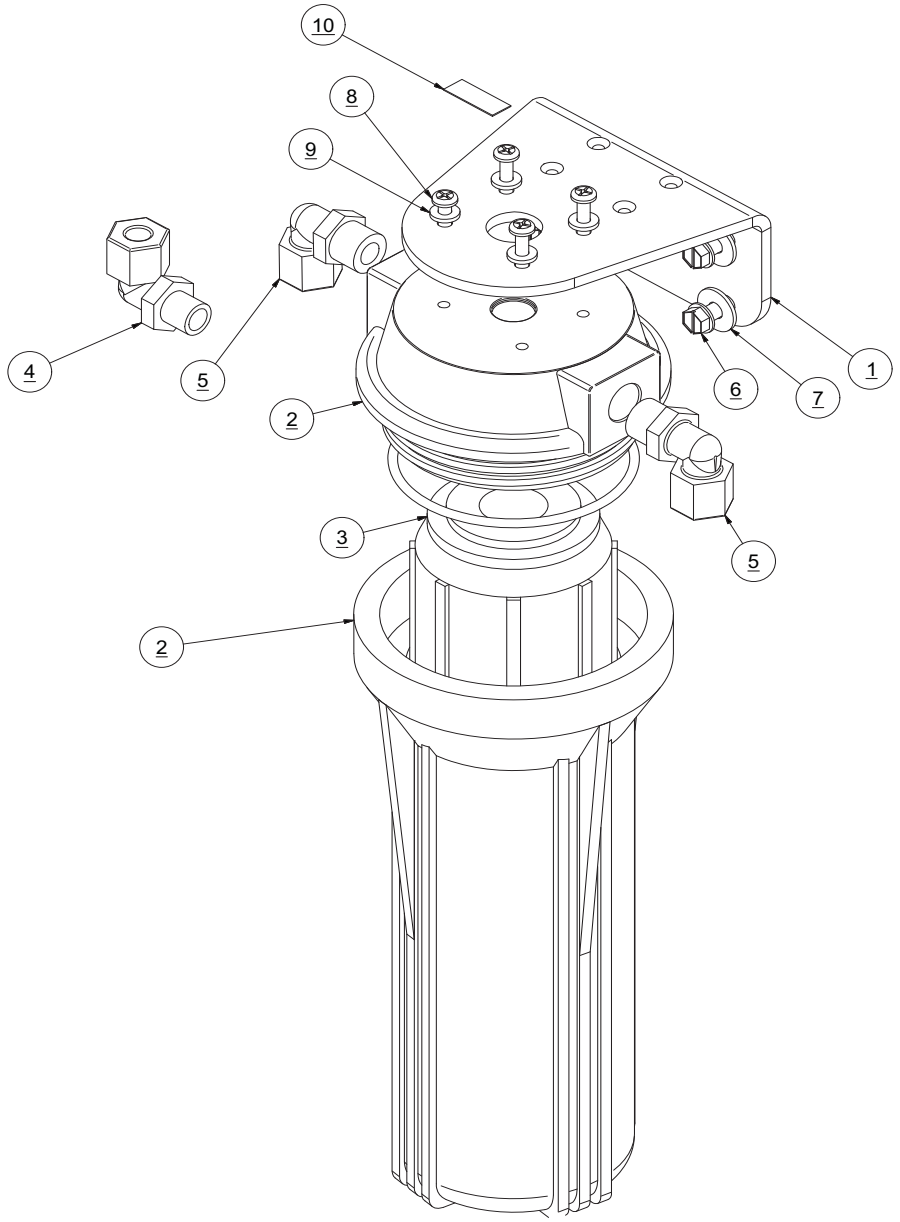
10
8
9
4
5
2
3
2
5
6
7
1

B5262000CV UV STERILIZER

ITEM NO.	QTY.	PART NUMBER	DESCRIPTION
1	2	20010418001A	BRACKET MNT SADDLE UV-AW TOP
2	2	20010418002A	BRACKET MNT SADDLE UV-AW BTTM
3	1	40000306CV	UV STERILIZER 2 GPM 12VDC
4	2	0204021769	ELB90 .375 TUBE x .25 MNPT PLASTIC
5	1	0204091869	FITTING,PP,3/8 ODx3/8 MT
6	2	0254011000	ELB90 0.25 MPT X 0.50BARB NY
7	4	05181432AA	CLAMP,HOSE,SS,1/2"
8	2	061100043000	WASHER,FLAT,OS,1/4",SS
9	2	061142145020	SCREW,HEX HEAD,.25-20x1-1/4",SS
10	4	061160630048	SC PHIL PAN # 10-24 X 3.00 SS
11	2	061182143024	SC LAG 0.25 X 1.50 SS
12	2	065070045000	NUT HEX .25-20 FLANGED
13	4	065080028000	WASHER FLAT #10 NYLON
14	2	2614019000	O-RING 212 QUARTZ SLEEVE
15	1	B651830001A	OWNERS MANUAL QUICK INSTALLATION UV LIGHT SP SERIES

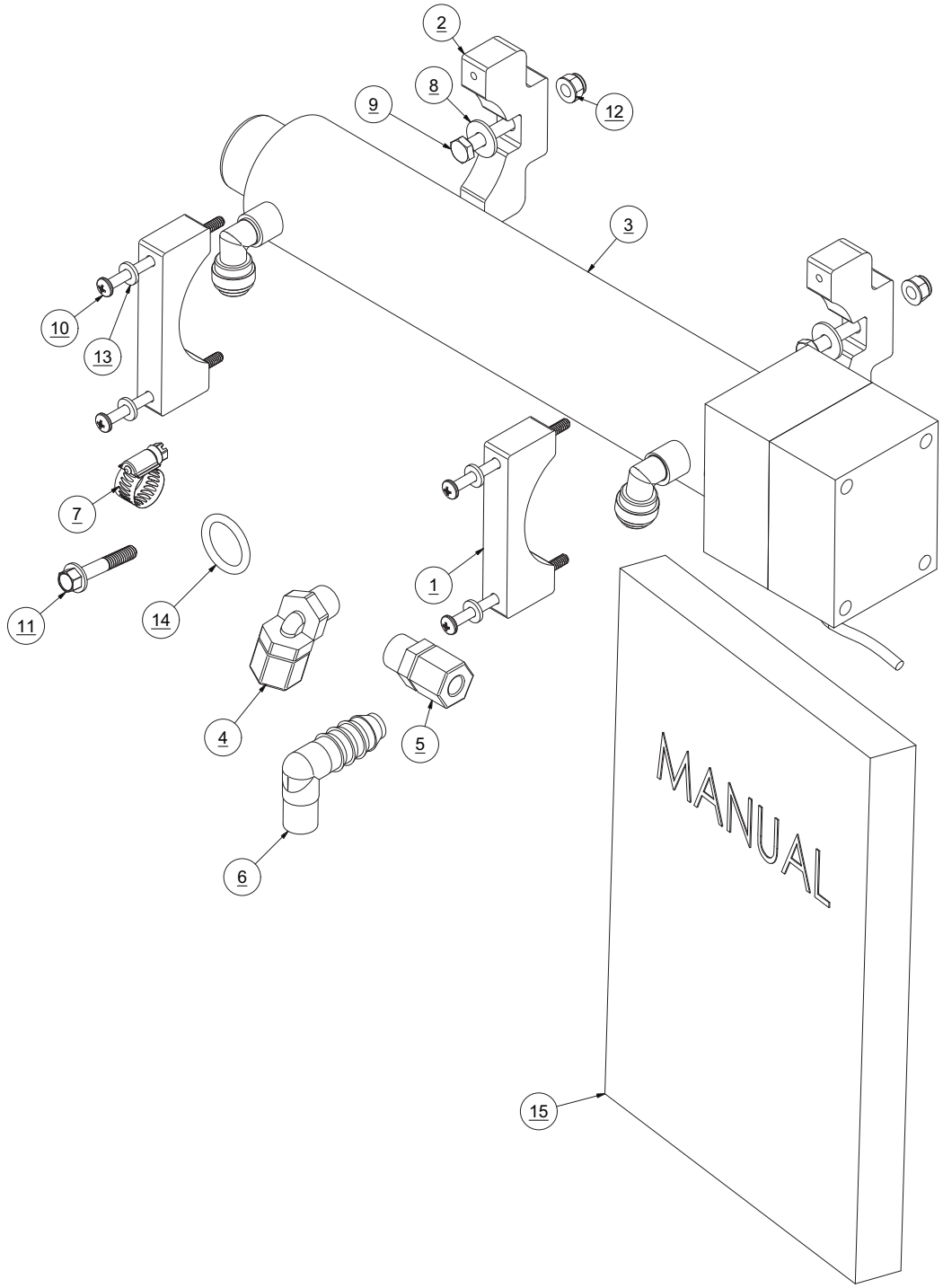
2
8
9
12
3
10
13
7
11
14
1
4
5
6
MANUAL
15

B611220003 REMOTE AW170 UW AWII

ITEM NO.	QTY.	PART NUMBER	DESCRIPTION
1	1	31315606WE	REMOTE TOUCH PAD 170
2	1	4900283104	CABLE MULTIST 8 CON WHT
3	2	3131100900	EZ PLUG RJ45

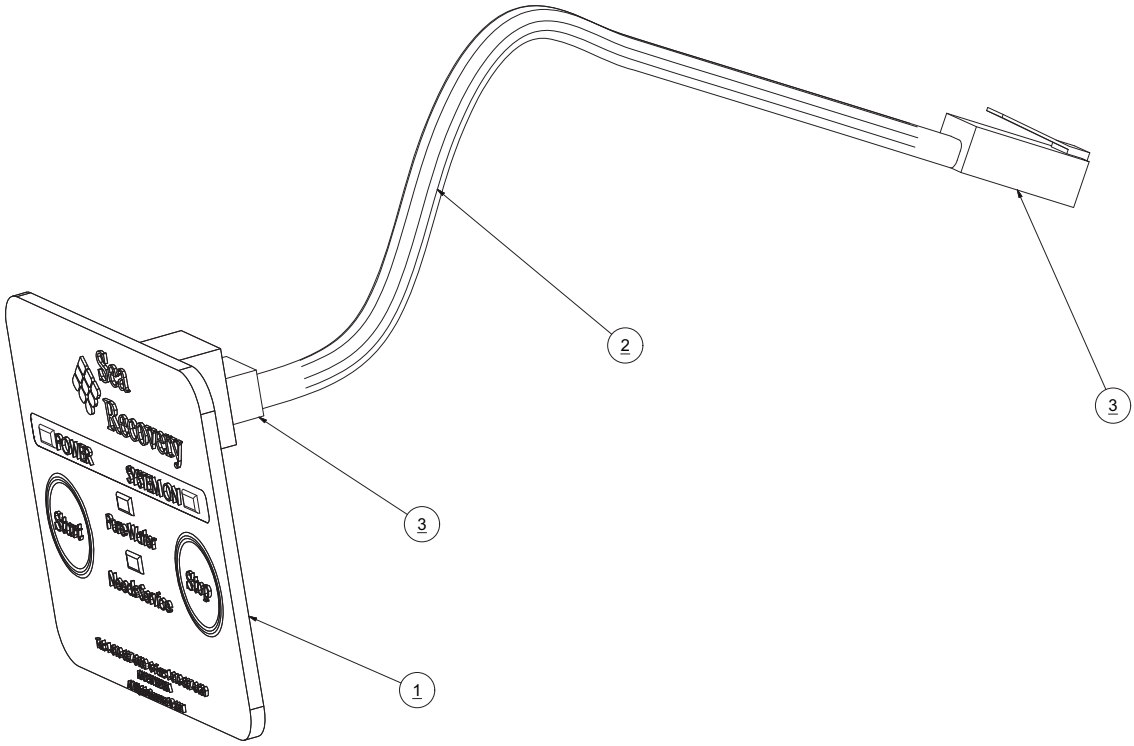

AVAILABLE TUBES AND FITTINGS

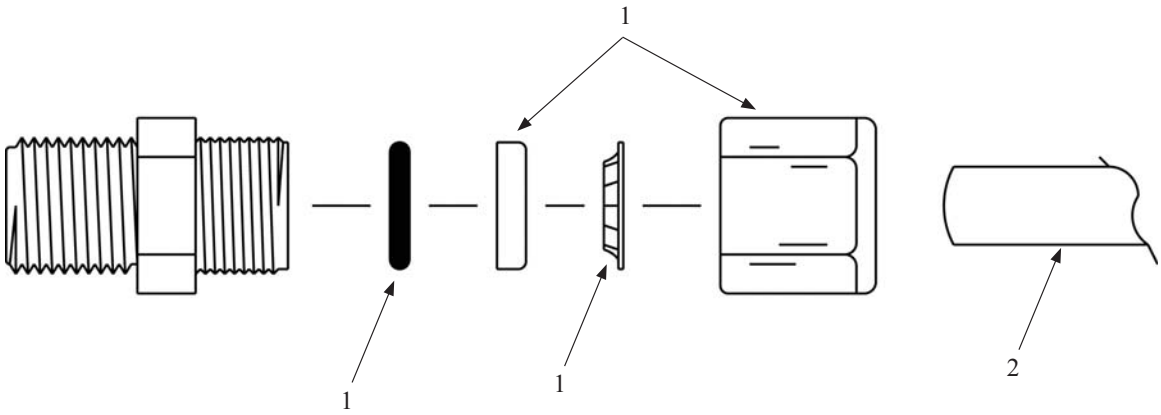

PART NO	DESCRIPTION
1. CONNECTOR MALE	
0204090669	1/4 inch tube x 1/8 inch mnpt
0204090869	1/4 inch tube x 1/4 inch mnpt
0204091669	3/8 inch tube x 1/8 inch mnpt
0204091769	3/8 inch tube x 1/4 inch mnpt
0204091869	3/8 inch tube x 3/8 inch mnpt
0204091969	3/8 inch tube x 1/2 inch mnpt
0204092069	3/8 inch tube x 3/4 inch mnpt
0204092269	1/2 inch tube x 1/8 inch mnpt
0204092369	1/2 inch tube x 1/4 inch mnpt
0204092469	1/2 inch tube x 3/8 inch mnpt
0204092569	1/2 inch tube x 1/2 inch mnpt
0204092669	1/2 inch tube x 3/4 inch mnpt
0204099069	5/8 inch tube x 1/8 inch mnpt
0204099169	5/8 inch tube x 1/4 inch mnpt
0204092869	5/8 inch tube x 3/8 inch mnpt
0204092969	5/8 inch tube x 1/2 inch mnpt
0204093169	5/8 inch tube x 3/4 inch mnpt
2. CONNECTOR FEMALE	
0204120669	1/4 inch tube x 1/8 inch fnpt
0204120869	1/4 inch tube x 1/4 inch fnpt
0204121769	3/8 inch tube x 1/4 inch fnpt
0204121869	3/8 inch tube x 3/8 inch fnpt
0204121969	3/8 inch tube x 1/2 inch fnpt
0204122569	1/2 inch tube x 1/2 inch fnpt
0204122669	1/2 inch tube x 3/4 inch fnpt
0204122969	5/8 inch tube x 1/2 inch fnpt
3. ELBOW 90 MALE	
0204020669	1/4 inch tube x 1/8 inch mnpt
0204020869	1/4 inch tube x 1/4 inch mnpt

PART NO	DESCRIPTION
0204020969	1/4 inch tube x 3/8 inch mnpt
0204021769	3/8 inch tube x 1/4 inch mnpt
0204021869	3/8 inch tube x 3/8 inch mnpt
0204021969	3/8 inch tube x 1/2 inch mnpt
0204022069	3/8 inch tube x 3/4 inch mnpt
0204022469	1/2 inch tube x 3/8 inch mnpt
0204022569	1/2 inch tube x 1/2 inch mnpt
0204022969	5/8 inch tube x 1/2 inch mnpt
4. ELBOW 90 FEMALE	
0204010669	1/4 inch tube x 1/8 inch fnpt
0204010869	1/4 inch tube x 1/4 inch fnpt
0204011769	3/8 inch tube x 1/4 inch fnpt
0204011869	3/8 inch tube x 3/8 inch fnpt
0204012469	1/2 inch tube x 3/8 inch fnpt
0204012569	1/2 inch tube x 1/2 inch fnpt
0204012969	5/8 inch tube x 1/2 inch fnpt
5. BRANCH TEE MALE	
0204150669	1/4 inch tube x 1/8 inch mnpt
0204151769	3/8 inch tube x 1/4 inch mnpt
0204152469	1/2 inch tube x 3/8 inch mnpt
0204152969	5/8 inch tube x 1/2 inch mnpt
6. RUN TEE MALE	
0204170669	1/4 inch tube x 1/8 inch mnpt
0204170869	1/4 inch tube x 1/4 inch mnpt
0204171769	3/8 inch tube x 1/4 inch mnpt
0204171869	3/8 inch tube x 3/8 inch mnpt
0204172469	1/2 inch tube x 3/8 inch mnpt
0204172569	1/2 inch tube x 1/2 inch mnpt
0204172969	5/8 inch tube x 1/2 inch mnpt
7. UNION TEE	
0204240869	1/4 inch tube
0204241869	3/8 inch tube
0204242469	1/2 inch tube x 3/8 inch tube
0204242569	1/2 inch tube
0204242869	5/8 inch tube x 3/8 inch tube
0204243069	5/8 inch tube
8. UNION	
0204210869	1/4 inch tube
0204211769	3/8 inch tube x 1/4 inch tube
0204211869	3/8 inch tube
0204212469	1/2 inch tube x 3/8 inch tube
0204212569	1/2 inch tube
0204212869	5/8 inch tube x 3/8 inch tube

PART NO	DESCRIPTION
0204212969	5/8 inch tube x 1/2 inch tube
0204213069	5/8 inch tube
9. UNION ELBOW 90	
0204220869	1/4 inch tube
0204221769	3/8 inch tube x 1/4 inch tube
0204221869	3/8 inch tube
0204222569	1/2 inch tube
0204223069	5/8 inch tube
10. UNION BULKHEAD	
0204270869	1/4 inch tube
0204271869	3/8 inch tube
0204272569	1/2 inch tube
11. TUBE	
0312122969	1/4 inch tube Black Nylon
0306152969	1/4 inch tube Blue Polypropylene
0306142969	1/4 inch tube Red Polypropylene
0312124169	3/8 inch tube Black Nylon
0306154169	3/8 inch tube Blue Polypropylene
0306144169	3/8 inch tube Red Polypropylene
0312125069	1/2 inch tube Black Nylon
0305125869	5/8 inch tube Black Polypropylene

TUBE COMPRESSION FITTINGS REPLACEMENT PARTS

ITEM	DESCRIPTION	PART NO.
FOR 1/4" O.D. TUBE		
1	NUT/SPACER/GRAB & O-RING 1/4"	0204-1/469
2	TUBE 1/4 BLACK	0312121969
FOR 3/8" O.D. TUBE		
1	NUT/SPACER/GRAB & O-RING 3/8"	0204-3/869
2	TUBE 3/8 BLACK	0312123569
FOR 1/2" O.D. TUBE		
1	NUT/SPACE/GRAB & O-RING 1/2"	0204-1/269
2	TUBE 1/2 BLACK NO SUBSTITUTE	0312124269
FOR 5/8" O.D. TUBE		
1	NUT/SPACER/GRAB & O-RING 5/8"	0204-5/869
2	TUBE 5/8 BLACK POLYPRO	0305125169

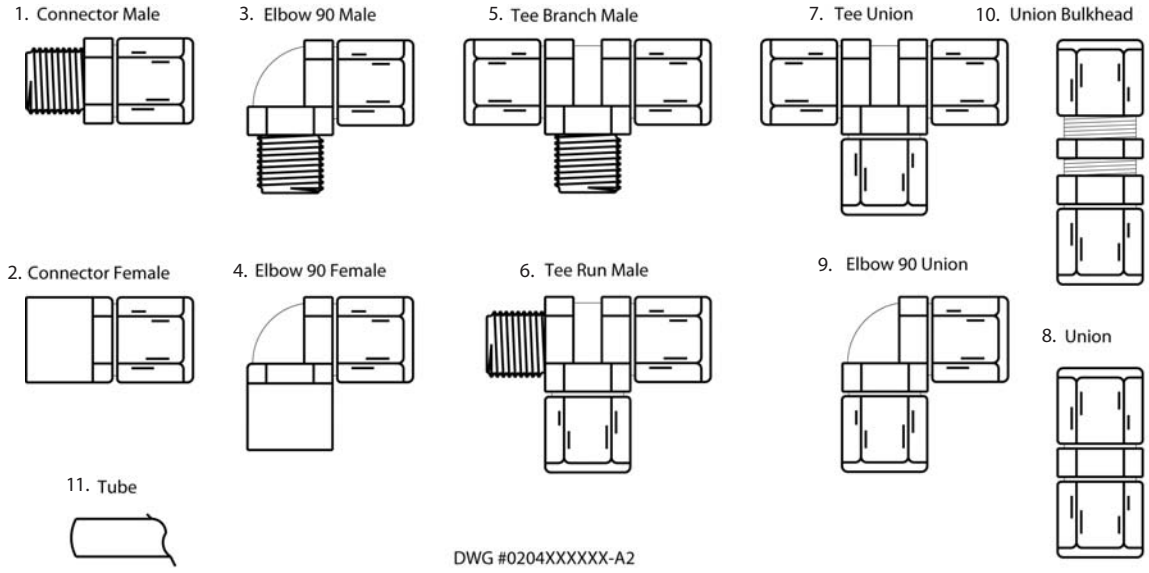

Chapter 13

Appendix

REVISIONS				
ZONE	REV.	DESCRIPTION	DATE	APPROVED
	-	DRAWING RELEASE	2017-05-01	PK

ULTRA WHISPER
12 VDC Controller

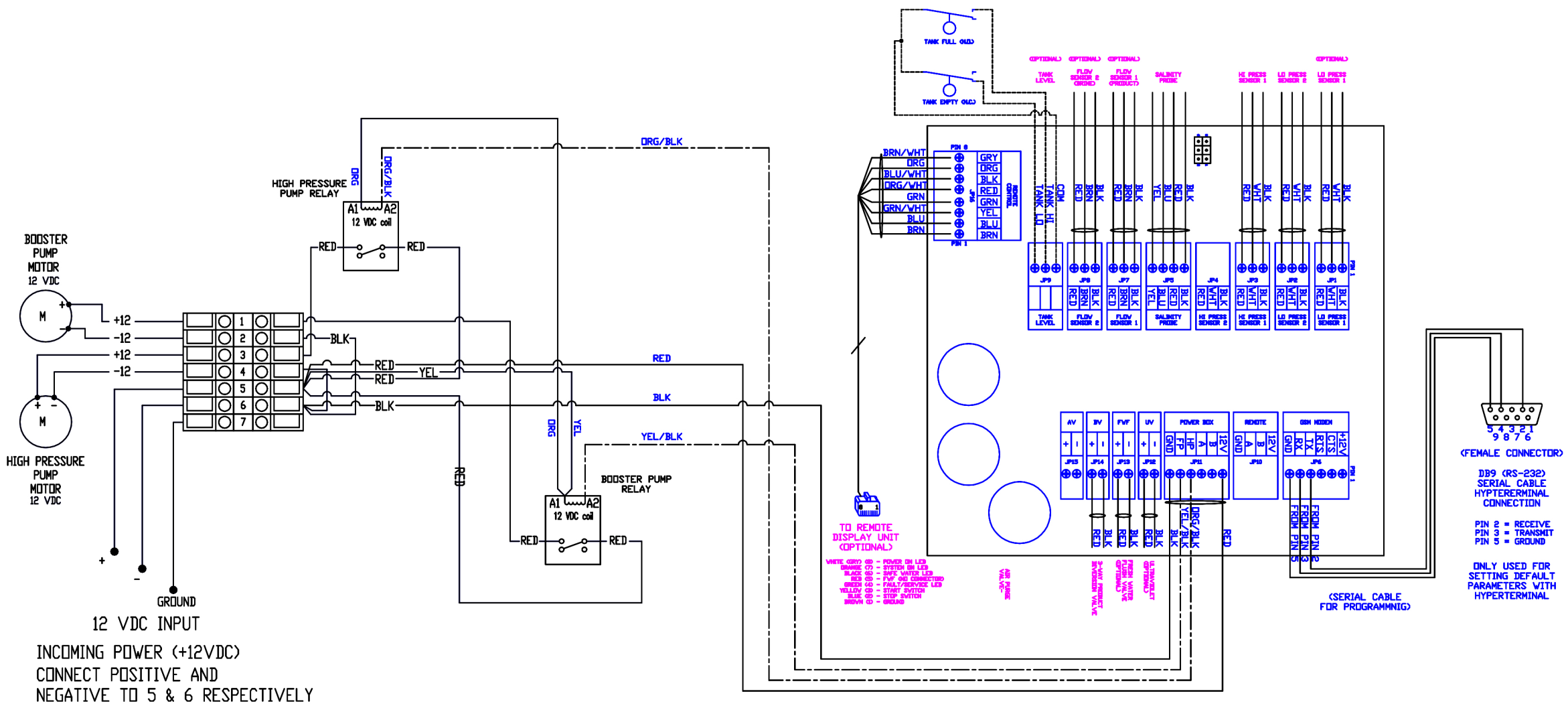

PROPRIETARY AND CONFIDENTIAL:
THE INFORMATION CONTAINED IN THIS DRAWING IS THE SOLE PROPERTY OF SEA RECOVERY CORP. AND ANY REPRODUCTION IN PART OR AS A WHOLE WITHOUT THE WRITTEN PERMISSION OF SEA RECOVERY CORP. IS PROHIBITED.

UNLESS OTHERWISE SPECIFIED

DIMENSIONS ARE IN INCHES

TOLERANCES:

.XX = +/- .01
.XXX = +/- .005
ANGLES: +/- 1°

Sea Recovery Corp.
19610 South Rancho Way
Rancho Dominguez, CA 90220
TEL: 1-310-637-3400 FAX: 1-310-637-3430
WEBSITE: www.searecovery.com

DESCRIPTION: WIRING DIAGRAM, ULTRA WHISPER 12V

SCALE:	REV:		DRAWING NUMBER:	SHEET NUMBER:
1:16	-	B	941116012E	1 OF 1

REVISIONS				
ZONE	REV.	DESCRIPTION	DATE	APPROVED
	-	DRAWING RELEASE	2017-05-01	PK

ULTRAWHISPER
24 VDC Controller
(WITH DIGITAL CONTROLLER)

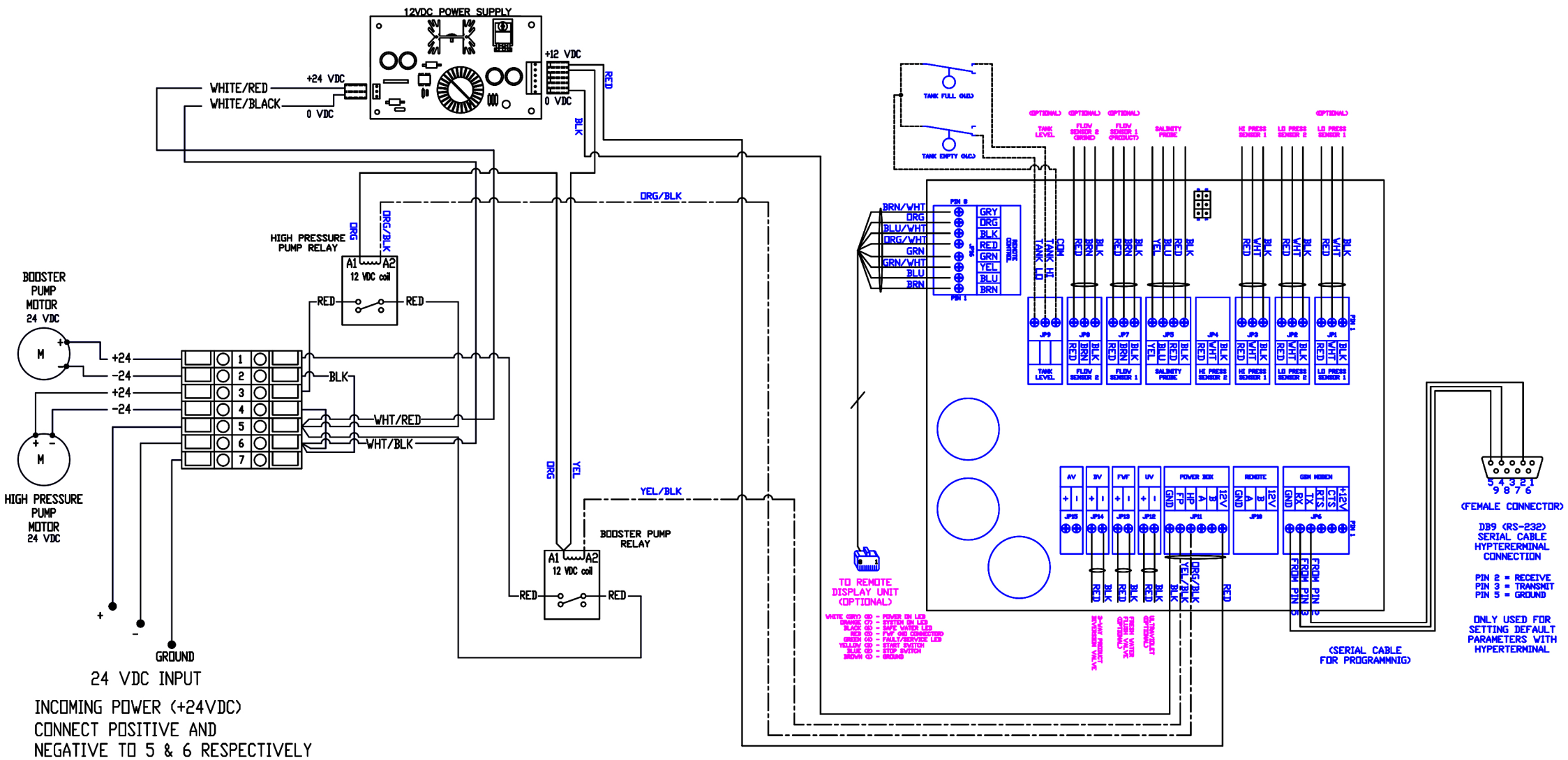

PROPRIETARY AND CONFIDENTIAL:
THE INFORMATION CONTAINED IN THIS DRAWING IS THE SOLE PROPERTY OF SEA RECOVERY CORP. AND ANY REPRODUCTION IN PART OR AS A WHOLE WHITHOUT THE WRITTEN PERMISSION OF SEA RECOVERY CORP. IS PROHIBITED.

UNLESS OTHERWISE SPECIFIED

DIMENSIONS ARE IN INCHES

TOLERANCES:

.XX = +/- .01
.XXX = +/- .005
ANGLES: +/- 1°

Sea Recovery Corp.
19610 South Rancho Way
Rancho Dominguez, CA 90220
TEL: 1-310-637-3400 FAX: 1-310-637-3430
WEBSITE: www.searecovery.com

DESCRIPTION:
WIRING DIAGRAM
ULTRA WHISPER 24V
(WITH DIGITAL CONTROLLER)

SCALE:	REV.:		DRAWING NUMBER:	SHEET NUMBER:
1:16	-	B	941116024C	1 OF 1

REVISIONS				
ZONE	REV.	DESCRIPTION	DATE	APPROVED
	-	DRAWING RELEASE	2017-05-01	PK

ULTRA WHISPER iii ELECTRICAL DIAGRAM

110/220 VAC Single Phase Controller

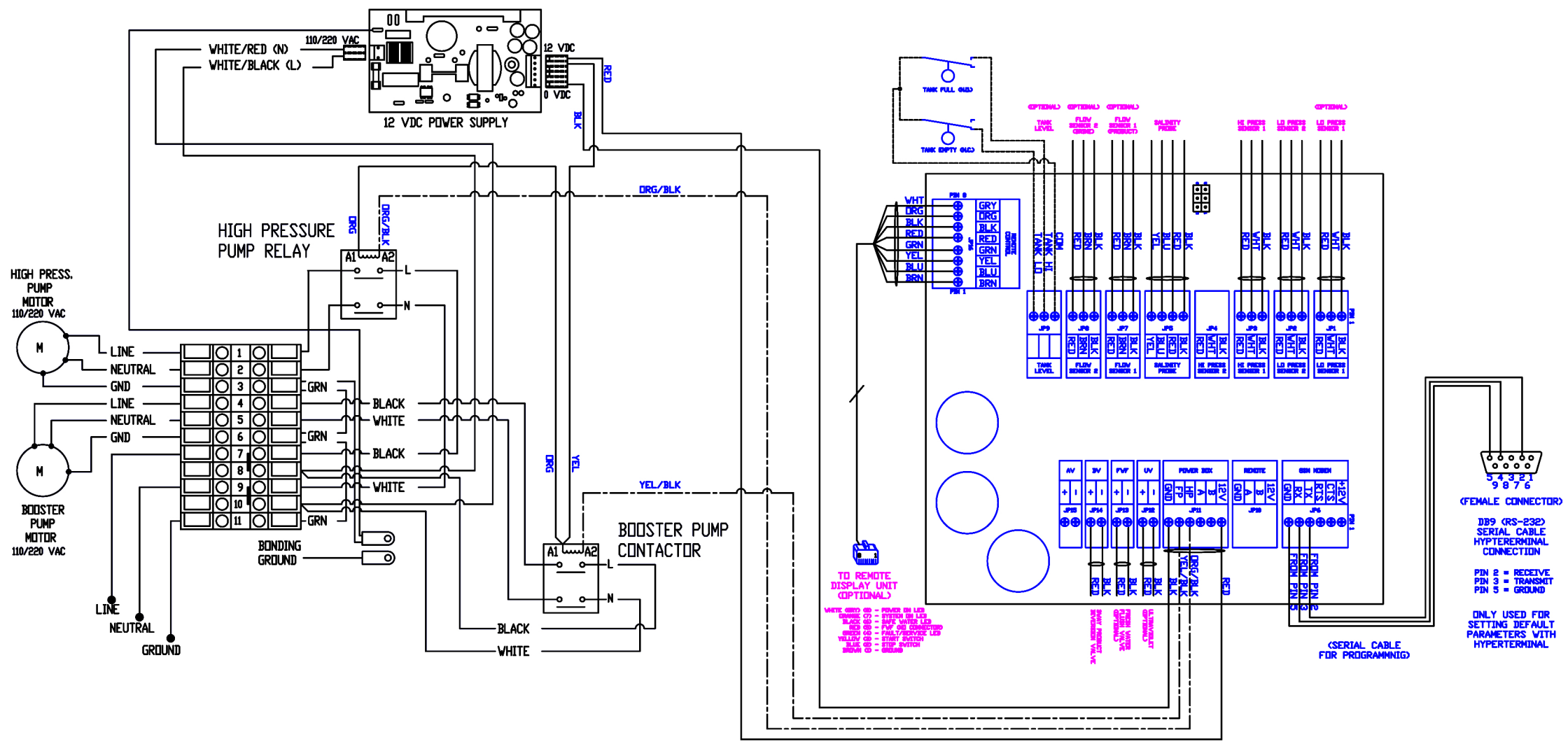

JUMPERED TERMINALS
1. TERMINALS 7,8
2. TERMINALS 9, 10

INCOMING POWER
CONNECT LINE & NEUTRAL TO 7 & 9 RESPECTIVELY

PROPRIETARY AND CONFIDENTIAL:
THE INFORMATION CONTAINED IN THIS DRAWING IS THE SOLE PROPERTY OF SEA RECOVERY CORP. AND ANY REPRODUCTION IN PART OR AS A WHOLE WHITHOUT THE WRITTEN PERMISSION OF SEA RECOVERY CORP. IS PROHIBITED.

UNLESS OTHERWISE SPECIFIED

DIMENSIONS ARE IN INCHES

TOLERANCES:

.XX = +/- .01
.XXX = +/- .005
ANGLES: +/- 1°

Sea Recovery Corp.
19610 South Rancho Way
Rancho Dominguez, CA 90220
TEL: 1-310-637-3400 FAX: 1-310-637-3430
WEBSITE: www.searecovery.com

DESCRIPTION: WIRING DIAGRAM, ULTRA WHISPER 110/220 VAC

SCALE:	REV:		DRAWING NUMBER:	SHEET NUMBER:
1:16	-	B	s-B6191310005	1 OF 1

DNV·GL

MANAGEMENT SYSTEM CERTIFICATE

Certificate No:
113173-2012-AQ-USA-RvA

Initial certification date:
30 March, 2012

Valid:
19 March, 2015 - 19 March, 2018

This is to certify that the management system of

Parker Hannifin Corp. - Parker Water Purification

2630 East El Presidio Street, Carson, CA 90810 USA

has been found to conform to the Quality Management System standard:

ISO 9001:2008

This certificate is valid for the following scope:

Design and Manufacture of Water Purification Units

Place and date:
Katy, TX, 03 March, 2015

MGMT. SYS.
RvA C 024

The RvA is a signatory to the IAF MLA

For the issuing office:
DNV GL – Business Assurance
1400 Ravello Drive, Katy, TX,
77449-5164, USA

John C. Stefan
Management Representative

Lack of fulfilment of conditions as set out in the Certification Agreement may render this Certificate invalid.
ACCREDITED UNIT: DNV GL Business Assurance B.V., ZWOLSEWEG 1, 2994 LB, BARENDRECHT, NETHERLANDS. TEL:+31102922689.
www.dnvba.com

CERTIFICATE NUMBER
16-HS1474582-PDA

DATE
18 Feb 2016

ABS TECHNICAL OFFICE
Houston SED Machinery - Piping
& Electrical Sys.

CERTIFICATE OF DESIGN ASSESSMENT

This is to certify that a representative of this Bureau did, at the request of

PARKER WATER PURIFICATION

assess design plans and data for the below listed product. This assessment is a representation by the Bureau as to the degree of compliance the design exhibits with applicable sections of the Rules. This assessment does not waive unit certification or classification procedures required by ABS Rules for products to be installed in ABS classed vessels or facilities. This certificate, by itself, does not reflect that the product is Type Approved. The scope and limitations of this assessment are detailed on the pages attached to this certificate.

Product: **Desalinator, Reverse Osmosis**
Model: **Ultra Whisper**

This Product Design Assessment (PDA) Certificate 16-HS1474582-PDA, dated 18/Feb/2016 remains valid until 17/Feb/2021 or until the Rules or specifications used in the assessment are revised (whichever occurs first).

This PDA is intended for a product to be installed on an ABS classed vessel, MODU or facility which is in existence or under contract for construction on the date of the ABS Rules or specifications used to evaluate the Product.

Use of the Product on an ABS classed vessel, MODU or facility which is contracted after the validity date of the ABS Rules and specifications used to evaluate the Product, will require re-evaluation of the PDA.

Use of the Product for non ABS classed vessels, MODUs or facilities is to be to an agreement between the manufacturer and intended client.

AMERICAN BUREAU OF SHIPPING

Tim Kimble
Engineer/Consultant

NOTE: This certificate evidences compliance with one or more of the Rules, Guides, standards or other criteria of ABS or a statutory, industrial or manufacturer's standards. It is issued solely for the use of ABS, its committees, its clients or other authorized entities. Any significant changes to the aforementioned product without approval from ABS will result in this certificate becoming null and void. This certificate is governed by the terms and conditions as contained in ABS Rules 1-1-A3/5.9 Terms and Conditions of the Request for Product Type Approval and Agreement (2010).

PARKER WATER PURIFICATION
2630 E. EL PRESIDIO STREET
CARSON CA
United States 90810
Telephone: 310-608-5600
Fax: 310-608-5692
Email: waterpurification@parker.com
Web: www.parker.com

Tier: 3 - Type Approved, unit certification not required

Product: **Desalinator, Reverse Osmosis**
Model: **Ultra Whisper**
Intended Service:
Marine & Offshore Application - Production of Fresh Water by Sea Desalination

Description:
Reverse Osmosis Desalination Unit. See attached "pdf" product details

Rating:
Ultra Whisper Compact: 8 GPH - 25 GPH
Ultra Whisper Modular: 8 GPH - 25 GPH

Service Restriction:
Unit Certification is not required for this product. If the manufacturer or purchaser request an ABS Certificate for compliance with a specification or standard, the specification or standard, including inspection standards and tolerances, must be clearly defined.

Comments:
The Manufacturer has provided a declaration about the control of, or the lack of Asbestos in this product.
1) The use of PVC Piping is limited to 35 psi for Water Application.

Notes/Drawing/Documentation:
Supporting Documentation:
Drawing No. A38000040C REv. 0 Ultra Whisper 400 GPD Compact, A38000040M Rev. 0 Ultra Whisper 400 GPD Modular
DNV Certificate per ISO 9001:2008 Management System , No. 113173-2012-AQ-USA-RvA, Valid for 19 March 2015-19 March 2018, Revision: -, Pages: 1

Terms of Validity:
This Product Design Assessment (PDA) Certificate 16-HS1474582-PDA, dated 18/Feb/2016 remains valid until 17/Feb/2021 or until the Rules or specifications used in the assessment are revised (whichever occurs first).

This PDA is intended for a product to be installed on an ABS classed vessel, MODU or facility which is in existence or under contract for construction on the date of the ABS Rules or specifications used to evaluate the Product.

Use of the Product on an ABS classed vessel, MODU or facility which is contracted after the validity date of the ABS Rules and specifications used to evaluate the Product, will require re-evaluation of the PDA.

Use of the Product for non ABS classed vessels, MODUs or facilities is to be to an agreement between the manufacturer and intended client.

STANDARDS

ABS Rules:
Rules for Conditions of Classification, Part 1 2016 Steel Vessels Rules 1-1-4/7.7, 1-1-A3, 1-1-A4, which covers the following:
2016 Steel Vessels Rules 4-6-2/5.7, 4-6-3 & 4-4-1/1.5;
2016 Steel Vessels Under 90 Meters (295 feet) in Length Rules 4-4-1/9.19, 4-4-2/7 & 4-1-1/7.5
2016 Offshore Support Vessels Rules 4-6-2/5.7, 4-6-3 & 4-4-1/1.5
Rules for Conditions of Classification, Part 1 - 2016 Offshore Units and Structures 1-1-4/9.7, 1-1-A2, 1-1-A3, which

PARKER WATER PURIFICATION
2630 E. EL PRESIDIO STREET
CARSON CA
United States 90810
Telephone: 310-608-5600
Fax: 310-608-5692
Email: waterpurification@parker.com
Web: www.parker.com

Tier: 3 - Type Approved, unit certification not required

covers the following:
2016 Mobile Offshore Drilling Unit Rules 4-2-1/11.29, 4-2-2/7 & 6-1-5

National:
NA

International:
NA

Government:
NA

EUMED:
NA

OTHERS:
NA

Declaration of Conformity

CE

SEA RECOVERY declares that the following models conform to the EN 55011A and EN 50082-2 standards:

Product Series:	**Model Names:**
Aqua Matic Series	Aqua Matic
Aqua Whisper Series	Aqua Whisper / DX/PRO
Aqua Whisper Mini Series	Aqua Whisper Mini
Ultra Whisper Series	Ultra Whisper
Coral Sea Series	Coral Sea

Sea Recovery®

Manufacturer's Name:
Sea Recovery

Manufacturer's Address:
2630 East El Presidio Street
Carson, CA 90810
U.S.A.

SEA RECOVERY CORPORATION
Seal of Quality
RANCHO DOMINGUEZ, CA

Official Seal

Supplementary Information:

"The product complies with the Requirements of the EMC Directive 89/336/EEC."

Lisa Gomez

Lisa Gomez
Quality & Environmental Manager
Manufacturer's Contact

Sea Recovery's **Reverse Osmosis Desalination Systems comply with FCC § 15.105**

United States Federal Communications Commission Compliance

FCC § 15.105

This equipment has been tested and found to comply with the limits for a Class A digital device, pursuant to Part 15 of the FCC Rules. These limits are designed to provide reasonable protection against harmful interference when the equipment is operated in a commercial environment. This equipment generates, uses, and can radiate radio frequency energy and, if not installed and used in accordance with the instruction manual, may cause harmful interference to radio communications. Operation of this equipment in a residential area is likely to cause harmful interference in which case the user will be required to correct the interference at his own expense.

Sea Recovery's **Reverse Osmosis Desalination Systems have been independently tested and determined to be in compliance with European CE (Conformité Européne)**

The CE Mark ('Trade Passport to Europe') is a visible declaration by the manufacturer (or his representative, importer, etc.) that the equipment which is marked complies with all the requirements of all the applicable directives. This mark allows manufacturers and exporters to circulate products freely within the 15 European Union (EU) members. Having ensured that the equipment does indeed meet all these requirements (including all the administrative requirements involved in being able to demonstrate compliance), the CE Mark may then be affixed and the product released.

The letters, "CE", indicate that the manufacturer has undertaken all assessment procedures required for the product. The CE mark indicates conformity to the legal requirements of the EU Directives.

The "CE" mark is now mandatory for regulated products sold in the European Union.

Sea Recovery®

Ultra Whisper ™

System Warranty Registration Information

INSTRUCTIONS: At the time of purchase of the Sea Recovery Reverse Osmosis Desalinator, please complete the warranty information listed below. After completing this form, please make a copy and mail it to the address provided at the bottom of this form.

System Information: Ultra Whisper 400 or 600

Model Number: _____ Serial Number: _____

Operating Voltage:

Direct Current: ___ 12 VDC or ___ 24 VDC

Alternating Current: ___ 110/115 VAC or ___ 220/230 VAC

Cycles: ___50 Hz or ___ 60 Hz

Date Purch ased: _____

Date Commissioned: _____
(First tested or operated)

Dealer Information:

Dealer's Name: _____

Address: _____

_____

City: _____ State: _____

Country: _____ Po stal Code: _____

Dealer's Invoi ce Number: _____

Mail a copy of this form to:

Sea Recovery Corporation
P.O. Box 5288
Carson, California 90745-5288 U.S.A.

Web: http://www.searecovery.com

Customer's comments: _____

Sea Recovery®

Ultra Whisper ™

System Identification Information

INSTRUCTIONS: It is important that this form is complete ly filled in at the time of purchase of the Sea Recovery Ultra Whisper Reverse Osmosis Desalinator. This information will be requested by our Service Department and Parts Order Desk whenever contacting Se a Recovery for technical assistance or by the Sales Department whenever ordering parts.

System Information: Ultra Whisper 400 or 600

Model Number: _____ Serial Number: _____

Operating Voltage:

Direct Current: ___ 12 VDC or ___ 24 VDC

Alternating Current: ___ 110/115 VAC or ___ 220/230 VAC

Cycles: ___50 Hz or ___ 60 Hz

Date Purchased: _____ Date Commissioned: _____
(First tested or operated)

Dealer Information:
Dealer's Name: _____
Address: _____
_____
City: _____ State: _____
Country: _____ Po stal Code: _____
Dealer's Invoi ce Number: _____

Customer Information:
Customer's Name: _____
Address: _____
_____
City: _____ State: _____
Country: _____ Postal Code: _____
Telephone Number: _____ E-Mail Address: _____

If Vessel Installation:
Boat's Manuf acture: _____
Boat's Model: _____, Length : _____ Feet or _____ Meters.
Boat's Na me: _____

RETAIN THIS FORM WITHIN THE OWNER'S MANUAL FOR REFERENCE.

Sea Recovery®